# COBOL REPORT WRITER PRECOMPILER

# PROGRAMMER'S MANUAL

Program Number 5798-DYR

and Program Number 5798-DZX (Run Time Library only)

IBM Publication SC26-4301-04 with updates

On-Line Version: Cross References are Yellow

Eighth Edition, January 2002

Text 1986, 1995, 2002 by:
**browsable media (PDF) version**
Complete copies of this document may be freely made and distributed on computer or magnetic media.

www.adobe.com/products/acrobat/readstep.html

SPC Systems Ltd.
Wimbledon
London
United Kingdom

www.spc-systems.com
info@spc-systems.com

# Contents


**Index** 331

1 Introduction and Tutorial 1

1.1 Welcome to COBOL Report Writer 3
1.2 Gentle Introduction 4
1.3 More about COBOL Report Writer 18
1.4 Some Shorter Forms 30
1.5 Other Features 31

2 Report Files and RD Entries 39

2.1 Report Files and RD: Keyword Table 41
2.2 Report Files 43
2.3 REPORT SECTION and RD 50
2.4 ALLOW clause 53
2.5 CODE clause 54
2.6 CONTROL clause 56
2.7 LINE LIMIT clause 63
2.8 OVERFLOW clauses 65
2.9 PAGE LIMIT clause 68

3 Report Group Descriptions 75

3.1 Introducing Report Groups 77
3.2 Coding Report Group Descriptions 81
3.3 BLANK WHEN ZERO clause 86
3.4 COLUMN clause 87
3.5 COLUMN-COUNTER 93
3.6 COUNT clause 94
3.7 FUNCTION clause 96
3.8 GROUP LIMIT clause 103
3.9 JUSTIFIED clause 104
3.10 LINE clause 105
3.11 LINE-COUNTER 112
3.12 MULTIPLE PAGE clause 114
3.13 NEXT GROUP clause 116
3.14 OCCURS clause 120
3.15 PAGE-COUNTER 127
3.16 PICTURE clause 129
3.17 PRESENT AFTER clause 133
3.18 PRESENT WHEN clause 139
3.19 REPEATED clause 152

3.20 SIGN clause 156
3.21 SOURCE clause 158
3.22 STYLE clause 163
3.23 SUM clause 167
3.24 TYPE clause 188
3.25 USAGE clause 195
3.26 VALUE clause 196
3.27 VARYING clause 199
3.28 WRAP clause 203

4 Procedural Statements 209

4.1 Report Writer Verbs: Overview 211
4.2 GENERATE statement 213
4.3 INITIATE statement 219
4.4 Report Writer SET statements 221
4.5 SUPPRESS PRINTING statement 227
4.6 TERMINATE statement 228
4.7 USE BEFORE REPORTING directive 230

5 Special Topics 235

5.1 Multiple Reports 237
5.2 Developing User-Written Functions 244
5.3 Independent Report File Handlers 248

6 Migration from OS/VS or DOS/VS COBOL Report Writer 261

6.1 Re-compiling OS/VS and DOS/VS COBOL Sources 263
6.2 Other Considerations 274
6.3 Physical Comparison of Report Writer Output 274
6.4 Unreachable Code 275

Appendices 277

Appendix A - List of Post-1968 Extensions 279
Appendix B - List of New Reserved Words 287
Appendix C - Summary of Formats 289
Appendix D - Glossary 297
Appendix E - Precompiler Messages 303

# Preface

**Note for the browsable (PDF) edition.** This version is a true rendering of the original printed document, but with color replacing lines and arrows, and many cross-references (or **"hot spots"**) inserted. When reading text that refers elsewhere, please probe for these hot spots to get there automatically. Also, these Preface sheets were simplified for convenience.

**This publication is intended for** programmers engaged in the writing of new COBOL programs using Report Writer, or the maintenance of old ones. Most of the text is intended for the general application programmer, but there is also information in part 5 for the systems programmer engaged in writing user extensions, such as for special output devices.

The language described in this **eigth edition** includes all the extensions to the Report Writer feature described in the **ANS-85 standard** and enhancements to the language made up to May 1995.

**This publication also describes** the basic (ANS-68) features used in IBM* OS/VS and DOS/VS COBOL and the many extensions introduced by IBM, Codasyl, and SPC Systems. For this reason, the product is referred to here as **new** Repor Writer to distinguish it from the **built-in** Report Writer of OS/VS and DOS/VS COBOL that they contain as a subset.

This publication is a combination of all the following elements:

- **tutorial** (Introduction and Tutorial),
- **detailed language description** (Report Files and RD Entries, Report Group Descriptions, Procedural Statements and Special Topics),
- **migration guide** (Migration from OS/VS or DOS/VS COBOL Report Writer),
- **quick reference** (Appendices)

The **tutorial** is a step-by-step introduction, containing sufficient detail to enable programmers to write or maintain simple Report Writer code, while giving them an appreciation of what is possible using the more advanced features. Readers with a knowledge of OS/VS or DOS/VS COBOL's built-in Report Writer should also read this part.

The **language description** contains a formal explanation of the syntax and illustrated explanation of the usage of each clause and statement.

The **migration guide** is for use in the migration of programs from OS/VS or DOS/VS COBOL's built-in Report Writer to the new Report Writer described here. You can obtain notification of your use of any extensions by means of a precompiler option (see *Installation and Operation*).

The *Appendices* list and categorize the extensions, with an explanation of the error messages and a summary of syntax and reserved words.

* *IBM* is a trademark of International Business Machines Corporation.

# 1

# Introduction and Tutorial

This first part is a short introduction to the principles of *COBOL Report Writer*. After reading it, you will be able to write or maintain simple report writer code and you will have enough appreciation of the more advanced concepts to be able to locate the information quickly in the main parts.

All the information given here can also be found in the more formal context of Parts 2 to 5.

# 1.1 Welcome to COBOL Report Writer

## 1.1.1 Introduction to this Product

This product has two separate purposes:

- To improve programmer productivity in all aspects of printed output in COBOL by encouraging both experienced users and newcomers to make more use of COBOL's report writer feature.

- To help users who have had experience with a version of COBOL report writer that was an integral part of the compiler and want to continue to use the same facilities.

The Report Writer features are implemented in this product by means of a *precompiler*, rather than within the compiler itself. The compiler processes the **intermediate** source which the precompiler automatically passes to it. The precompiler phase is made as far as possible **transparent** to programmers, so that their attention is not distracted from the **original** report writer source. The precompiler and the compiler cooperate closely in a single-step operation and a final listing phase combines the output from both to produce a single source listing, enabling you to disregard the fact that two separate processes are involved. A description of this process will be found in *Installation and Operation*.

## 1.1.2 What is Report Writer?

Report Writer is COBOL's own built-in non-procedural facility for the production of printed output. It enables you to define and produce all the listings, reports, and displayed summaries that would normally be required from a COBOL application, but in far less time. It allows many more printed outputs, which might have been produced previously using stand-alone non-COBOL report generators, to be done in COBOL, because it reduces greatly the time and effort needed to code and test a COBOL program with printed output.

Report writer appeared in its original form in 1961 and later entered the 1968 ANS Standard. This version provided certain basic features that users of accounting machines were accustomed to, such as simple accumulation, cross-footing, and counter-rolling, as well as automatic page numbering. The implementation of report writer described in this volume contains all the facilities of the standard *ANS-68*, *ANS-74*, and *ANS-85* report writer, plus *IBM extensions*, and includes many additional features which were added in various stages since 1974, many of which appear in the proposed *ANS-9x* standard. It is more suitable for the more varied and complex outputs needed by modern applications. There is no special term for this generalized, extended version of the language, so it is referred to in this manual simply as *new* Report Writer.

### 1.1.3 Compatibility With Built-In COBOL Report Writer

Apart from a few insubstantial differences, listed and explained in Part 6, COBOL Report Writer **includes the whole of the ANS-68 Report Writer of IBM's OS/VS COBOL and DOS/VS COBOL**, so if you will be using sources migrated from either of these, they should work just as they did before. Customizing with the (default) option OSVS set on ensures the highest degree of compatibility with OS/VS and DOS/VS COBOL (see *Installation and Operation*.)

COBOL Report Writer also has many completely new features that are not a part of these standards, as well as enhancements to the original features. Several of them look forward to the next ANS standard. This volume points out which features are unique to new Report Writer in a *Compatibility* paragraph at the end of each section. A summary list of all the enhancements will be found at the start of parts 2, 3, and 4, and in Appendix A. Those ANS-68 features that were deleted or changed in the ANS-74 and ANS-85 Standards are nevertheless retained in this product; these cases are also listed in Appendix A.

## 1.2 Gentle Introduction

### 1.2.1 What is a Report?

Wherever you see the term report in this publication, it means **any** human readable output that may be produced by a program. Nowadays, the term report is normally used to mean a **special** printout or screen produced by a report generator. We use the term in a more general sense. **Any** readable output, whether long or short, "one-shot" or routine, printed or not, is a report. For instance, **any** of the following is a **report** and could be produced by COBOL Report Writer:

- Pay slips and paychecks printed on a mainframe printer;
- Invoices printed by a small remote printer;
- A small summary print produced at the end of a large update program;
- Sales of golf shoes, summarized by region and area, during the years 1985 to 1992 (a one-time, ad hoc report);
- An extremely complex print of personnel records with many variable-length lines and fields, "printed" on microfiche.

The only requirements for a report are that it should be readable (all fields USAGE DISPLAY only) and should consist of output only.

### 1.2.2 What Does Report Writer Do?

When you write Report Writer code, you do not write a sequence of procedural statements as you would in elementary COBOL. Instead, most of your effort is spent in specifying the **appearance** of the report. The DATA DIVISION syntax enables you to code the layout of your printout entirely in descriptive *data-oriented* terms. The only

"verbs" used are those that begin (*INITIATE*) and end (*TERMINATE*) the report and that *GENERATE* whole blocks of lines, known as *report groups*.

Report writer automatically generates your print record descriptions, your intermediate data areas, and all the procedural code needed to produce your outputs, saving you the effort that elementary COBOL would have required. For particularly difficult or challenging layouts, there are more advanced data clauses. By studying these in the later parts of this publication, you will learn to produce all your outputs with COBOL Report Writer.

Although so much is performed automatically, you still retain control at the highest level over all operations, because no report writer action takes place until one of the statements INITIATE, GENERATE, or TERMINATE is executed. However, these statements are sufficiently high-level to require only the simplest logic in your PROCEDURE DIVISION.

Since you may use COBOL Report Writer in **any** COBOL program, you may use it in any program that has to produce readable output - even if the program performs many other tasks. COBOL Report Writer does not extract the input data itself, unlike a report generator, which means that it may be used in partnership with all types of COBOL input: standard files, databases, and subroutine or module linkage.

### 1.2.3 Report Writer in Easy Steps

**Step 1: Find the Report Groups**

Your program may have one or several report layouts. Here is an example of one hypothetical report layout:

```
           CRUMBLY COOKIE COMPANY   ORDERS   PAGE 1

      DATE     TYPE        QUANTITY     VALUE OF ORDER

   10/04/84    GINGERBREAD   100           $20.50

   06/05/84    CHOC. CHIPS    50           $18.20

   11/06/84    LEMON CREAM   150          $110.00
 **OUT OF STOCK


              TOTALS: DEPOT NORTH-WEST    $148.70
                                         =========
```

Your first task is to divide up the layout into *report groups*. **A report group is a "block" of lines, produced in one operation.** Your layout may be built up from any number of different report groups. You can allow the shape and contents of each report group to vary as much as you like but, if the variations become very complex, it will be easier to define two different report groups. The following guidelines should be used to define a report group:

- It may consist of from **one** up to **any number** of lines, and may have **any number** of fields.

- It normally **fits on one page**, rather than being split by a page boundary. There are exceptions to this rule in *MULTIPLE PAGE* groups and *REPORT HEADING* and *FOOTING* groups, described later.

- It may contain fields whose contents come from **anywhere** in the *DATA DIVISION*, provided that all the fields are present in memory at the moment your program generates the report group.

If your report structure corresponds to records in a main file or database, remember that, unless you have a special reason for reading ahead and buffering several records, a report group should correspond to **one record** from your main file or database. (However, there is also a *summary reporting* feature that enables your program to output one report group that summarizes a whole set of records.)

Mark each report group clearly. Only **one** instance of each group needs to be marked, because only one description of each group is needed. You might use square brackets in the margin of your layout. In this example, let's draw a rectangle round each report group.

Here is the result:

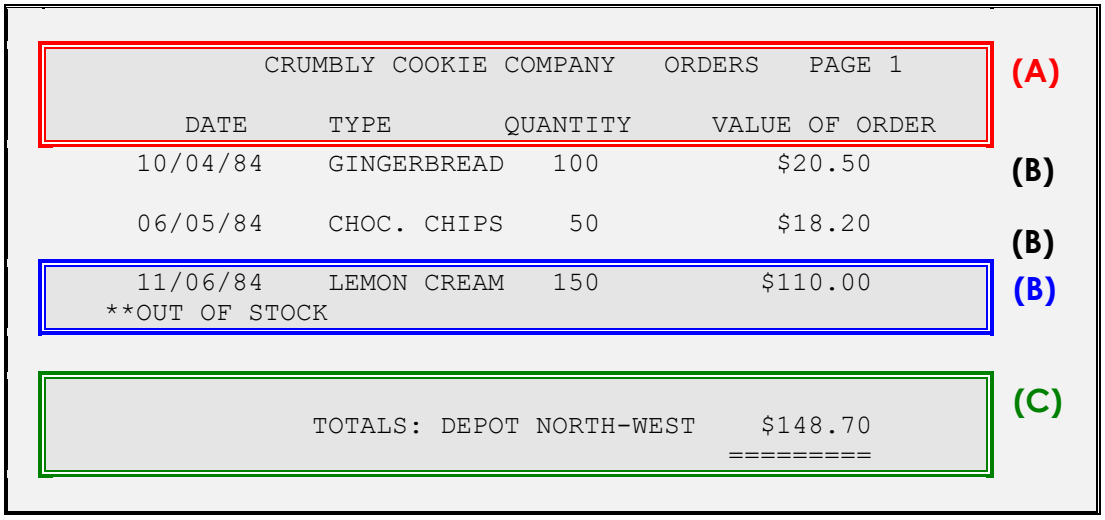


There are three instances of report group ***(B)*** in the picture. Only one instance needs a "box", and it is best to draw it around the **most complex** case, that is, the instance with the extra line "***OUT OF STOCK*". (We want this line to be part of the same report group, rather than a report group in its own right, because we want to ensure that it will never be separated from the preceding line by a *page advance*.)

### Step 2: Decide on the TYPE of Each Report Group

Each report group can appear in one of seven basic positions in your report, indicated by the *TYPE* clause. Here are their names and positions:

**DETAIL** or **DE**

This is the TYPE assumed by any group that is not of one of the special six described below. DETAIL groups usually contain the most basic data in the report. They are the only report groups that you GENERATE. TYPE DETAIL and the next two are known as *body groups*. (They fall between the PAGE HEADING and PAGE FOOTING, if any, on each page.)

**CONTROL HEADING** or **CH**

This group is generated automatically at the start of each different value of the corresponding *control* field (as explained in Step 3 below).

**CONTROL FOOTING** or **CF**

This group is generated automatically at the end of each different value of the corresponding *control* field.

**PAGE HEADING** or **PH**

This group will appear at the start of each page.

**PAGE FOOTING** or **PF**

This group will appear at the end of each page.

**REPORT HEADING** or **RH**

This group will appear once, on a page by itself or before the first PAGE HEADING (if any), at the very start of the printout.

**REPORT FOOTING** or **RF**

This group will appear once, on a page by itself or after the last PAGE FOOTING (if any), at the very end of the printout.

**Each TYPE is optional**. Your report may contain any number of different DETAIL groups, any number of different CONTROL HEADING and CONTROL FOOTING groups (up to one of each for each control level), but only one of each of the other four.

We can now assign the correct TYPEs to each group in our layout:

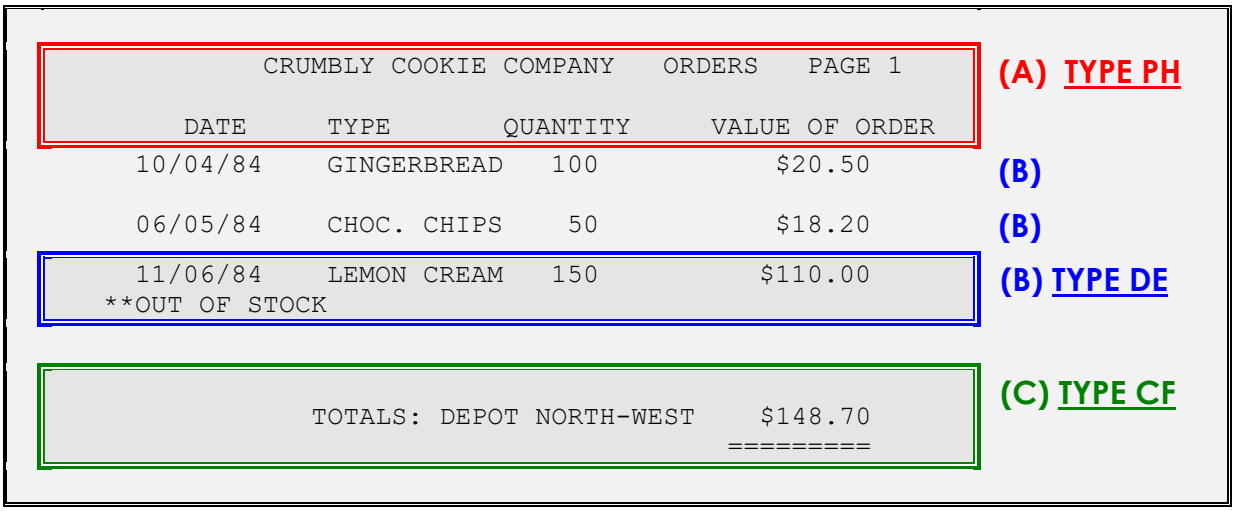


**Step 3: Code the RD Entry**

Your report groups are described in the *REPORT SECTION*, which is the **last** section in your program's DATA DIVISION. The REPORT SECTION may contain any number of *Report Descriptions*. Each of these begins with an *RD* entry that starts in the A-margin:

```
REPORT SECTION.
RD
```

Follow this with a *report-name* of your choice. This name will be used to stand for the report as a whole, so choose a name that is appropriate:

```
REPORT SECTION.
RD  STOCK-SUMMARY
```

Several clauses may follow your report-name. The optional *LINE LIMIT* clause gives the maximum number of columns you expect per line and is used as a safety measure against losing data due to line overflow. The *FIRST DETAIL* clause (or its alternative spellings *FIRST DE* or *FIRST BODY GROUP*) indicates on which line the main information of each page should start. The *PAGE LIMIT* clause is required if your report is divided into pages. It gives the maximum number of lines to be written to each page. The order in which you code these clauses and phrases does not matter.

```
REPORT SECTION.
RD  STOCK-SUMMARY
    LINE LIMIT 132
    FIRST DETAIL 5
    PAGE LIMIT 64
```

There are other clauses available to mark out different regions of the page. (See 2.9 *PAGE LIMIT clause*.)

Our report has *control totals*. That is, after the change in value of a certain control field *(DEPOT)*, we want COBOL Report Writer to produce an extra report group (the *CONTROL FOOTING*). The data must arrive in the correct sequence as COBOL Report Writer does **not** *SORT* your data itself. (You might use COBOL SORT for that.) The field is called a *control* and a change in its value is called a *control break*. You may nest as many different levels of control as you need. You may also have corresponding *CONTROL HEADING* groups to appear before the start of the detail lines for the new control value. (In our example, there is just one level of control and no CONTROL HEADING group). You indicate which fields are to be used to test for control breaks by means of the *CONTROL* (or *CONTROLS*) clause. Each control represents a different level. Your controls **must** be listed in *hierarchical order* from highest down to lowest. In our example it is simple because there is only one level:

```
REPORT SECTION.
RD  STOCK-SUMMARY
    LINE LIMIT 132
    FIRST DETAIL 5
    PAGE LIMIT 64
    CONTROL IS DEPOT.
```

Because the CONTROL clause is the last clause of the RD entry, you write a *period* (".") after it. Here is another example of a CONTROL clause. This time, we have two control fields and also a special all-encompassing level, known as *REPORT* or *FINAL*, that may be used for producing grand totals for the whole report.

```
    CONTROLS ARE REPORT, YEAR, MONTH
```

LINE LIMIT, FIRST DETAIL, PAGE LIMIT, and CONTROL are **not** the only clauses you can write in the RD entry. The others are described in the chapter *Report Files and RD Entries*. The order in which you code the RD clauses is irrelevant.

**Step 4: Code the Report Group Descriptions**

**Step 4A: 01-Level Entries**

Each report group is coded as a series of *COBOL entries*. Each entry consists of a *level-number*, an optional *data-name*, any number of optional clauses, and a *period*. Each report group must start with a *01* level-number in the A-margin:

```
01
```

If the group is a *DETAIL*, follow this with a report-group data-name of your choice, followed by the optional word *TYPE* and the type of the group:

```
01  TYPE PH.
    ... etc ...
01  COOKIE-LINE  TYPE DE.
    ... etc ...
01  TYPE CF.
    ... etc ...
```

To make your program even clearer, you may spell out the TYPE clause in full; for instance: *TYPE IS PAGE HEADING*. Any number of entries, indicated by our "...", may follow the 01-level entry, as you will shortly see.

You indicate which level of CONTROL HEADING and CONTROL FOOTING you are describing by writing *FOR name-of-control* after CH and CF. (This is optional if there is only one level, or you want ALL levels in a CONTROL FOOTING). Taking our example with three levels above, you might code:

```
01  TYPE CH FOR YEAR.
      ...
01  TYPE CH FOR MONTH.
     ...
```

**Step 4B: LINEs and COLUMNs**

After each group's 01-level entry, code a series of *LINE* entries, each containing a series of *COLUMN* entries. COLUMN may be abbreviated as *COL*. (You will see, in the chapter *Report Group Descriptions*, that you can also code a *dummy* group without LINEs or COLUMNs.) You indicate that an entry is at a lower level by increasing the level-number. For instance, you might choose *03* for LINE entries and *05* for COLUMN entries:

```
01  TYPE PH.
  03  LINE ...
    05  COL ...
```

After the *LINE* or *COL* keyword you may choose one of two ways to specify positioning for your line or field by writing either *integer* or *+integer*.

- *LINE integer* gives you an **absolute**, that is, **fixed**, LINE position, counting from 1 at the top of the page, to the maximum given in your PAGE LIMIT. If you

use absolute LINE clauses in a group, the integers must **increase**. You might use this form for the PAGE HEADING in our example.

- *LINE + integer* (+ can also be written *PLUS*) gives you a **relative** LINE position. It will cause the vertical position to move down that number of lines. For example, *LINE + 1* means *place on the next line*. *LINE + 2* means *leave one blank line*. (This form is rather like *WRITE... AFTER ADVANCING...*, translated entirely into data terms, of course.) You may **mix** absolute and relative LINE clauses in the same report group, provided that you begin with an absolute LINE. *LINE* alone implies *LINE + 1*.

```
      CRUMBLY COOKIE COMPANY    ORDERS    PAGE 1     ◄ LINE 1

 DATE      TYPE        QUANTITY      VALUE OF ORDER  ◄ LINE 3 or LINE + 2
```

- *COLUMN integer* gives you an **absolute**, i.e. **fixed**, COLUMN position for the **left-hand** character of the field, counting character positions from 1 at the left, up to the maximum given in your *LINE LIMIT*. You can also *anchor* the field at its **CENTER** column by writing *COLUMN CENTER integer*, and you can fix the field at its **RIGHT** column by writing *COLUMN RIGHT integer*. If you use these absolute COLUMN clauses, the integers must **increase** within a LINE.

- *COLUMN + integer* (COLUMN can be shortened to *COL* and + can be written *PLUS*) gives you a **relative** COLUMN position. It will cause the current horizontal position to move right that number of positions from the **last** column of the preceding field (from zero if this is the first field) to the **first** column of the current field. For example, *COL + 1* means *place this field in the next column without a gap*, and *COL + 2* means *leave one column blank*.

```
line nos   column numbers ...>>>
...        1                   20 or + 3
 1         XXXXXXXXXXXXXXXXX..YYYYYYYY
           .
           .
           .
 5 or + 4  ZZZZZZ
```

Report Writer writes your report groups **vertically** down the page **in the order in which they are GENERATEd**. *DETAIL* and *CONTROL* groups (HEADING or FOOTING), which are known as *body groups*, are first checked to see whether all their lines will fit on the current page. If your report group begins with an **absolute** LINE, report writer will advance to a new page **if that LINE number has been reached or passed**. If your report group begins with a **relative** LINE, report writer checks the size of the report group. If there is no room, or **if there is not enough room for the whole group**, report writer will advance to a new page.

Advancing to a new page involves automatically generating your *PAGE FOOTING*, if you defined one, followed by your *PAGE HEADING*, if you defined one. If a body group (CH, DE or CF) begins with a **relative** LINE, it is positioned on the *FIRST DETAIL* line, irrespective of the value in the LINE clause. (If you did not code a FIRST DETAIL sub-clause, it is assumed to be the line immediately following our PAGE HEADING, or line 1 if there is no PAGE HEADING.)

**Step 4C:VALUEs and SOURCEs**

To complete your Report Group Descriptions, you need to specify the **contents** of the fields. The two most usual ways, which are sufficient for this example, are as follows:

If the contents of the field consist of **fixed text**, write:

```
VALUE "literal",   or simply:  "literal"
```

If the contents of the report field come from a **field** in your COBOL *DATA DIVISION*, write:

```
PICTURE (or PIC) picture-symbols   SOURCE name-of-field
```

Your *SOURCE* field may be defined in any section of your DATA DIVISION, or it may be a *special register* such as LINE-COUNTER. The *SOURCE* keyword may be omitted. You may use *subscripts* and *qualifiers*, for example: *SOURCE BACK-PAY IN MASTER-RECORD (4)*. You may also use *arithmetic expressions* and the word *ROUNDED* , if needed; for example:

```
PIC $(9)9.99 SOURCE (MONTHLY-PAY * 12) + YEARLY-BONUS ROUNDED
```

You must code a *PICTURE* clause with the SOURCE clause. This specifies the format in which you would like the field displayed and is the same clause as in elementary COBOL. It can be abbreviated as *PIC*. Here are two examples:

```
PIC $(8)9.99   SOURCE MONTHLY-PAY
PIC X(32)      SOURCE NAME-OF-STUDENT
```

The rules for storing the field work exactly as for the *MOVE* (or the *COMPUTE*) statement of elementary COBOL. If your SOURCE refers to a *CONTROL* field, then you will obtain the value **before the control break** if report writer is currently processing CONTROL FOOTING groups. **This is the only case where you do not obtain the value contained in the field at that instant.**

Your layout may require a *page number*. This is held in a special register (a dedicated internal COBOL location) called *PAGE-COUNTER*. This location is set up automatically by report writer. There are also *LINE-COUNTER* and *COLUMN-COUNTER* special registers.

Suppose that the record that supplies data for the layout above is defined in a standard file as follows:

```
FD  COOKIE-FILE                LABEL RECORDS STANDARD.
01  COOKIE-RECORD.
    05  DEPOT                 PIC X(10).
    05  ORDER-DATE            PIC 9(6).
    05  COOKIE-TYPE           PIC X(12).
    05  QTY-ORDERED           PIC 9(4) COMP.
    05  QTY-IN-STOCK          PIC 9(4) COMP.
    05  ORDER-VALUE           PIC S9(5)V99 COMP.
```

Now we are ready to complete the PAGE HEADING group and the first line of the DETAIL group for the layout above, using these new clauses.

**(A)**

```
REPORT SECTION
RD  STOCK-SUMMARY
    LINE LIMIT 132
    FIRST DETAIL 5
    PAGE LIMIT 64
    CONTROL IS DEPOT.
01  TYPE PH.
  03  LINE 1.
    05  COL 12   VALUE "CRUMBLY COOKIE COMPANY   ORDERS".
    05  COL 47   VALUE "PAGE".
    05  COL +2   PIC Z9    SOURCE PAGE-COUNTER.
  03  LINE 3.
    05  COL 7    VALUE
        "DATE     TYPE       QUANTITY     VALUE OF ORDER".
01  COOKIE-LINE  TYPE DE.
  03  LINE + 2.
    05  COL 4    PIC 99/99/99   SOURCE ORDER-DATE.
    05  COL 16   PIC X(12)      SOURCE COOKIE-TYPE.
    05  COL 29   PIC ZZZ9       SOURCE QTY-ORDERED.
    05  COL 41   PIC $(5)9.99   SOURCE ORDER-VALUE.
```

**Step 4D: Conditional Items**

There is one item in our layout that we do not want to produce every time. This is the message "*OUT OF STOCK*". We deliberately allowed for it by including it in the "box" we drew round the typical DETAIL group. It should only be produced if the condition

```
QTY-ORDERED > QTY-IN-STOCK
```

is **true**. To make any item **depend on a condition's being true or false**, use the clause:

```
PRESENT WHEN condition
```

Report writer will then automatically test the condition when it is about to produce the item. If the condition is false, the item is **ignored**. If you put the clause on a *LINE* entry, it is the **whole line** that is ignored. (You can in fact put it at any level. When a group field is ignored, so are all the fields within the group.) In the case here, we **do** want the whole line to be ignored if the condition is false, so the following would be a valid description for the second line for the DETAIL group:

**(B)**

```
03  LINE PRESENT WHEN QTY-ORDERED > QTY-IN-STOCK.
  05  COL 2    VALUE "**OUT OF STOCK".
```

**Step 4E: Totalling**

The sample layout tells you to produce a *total* in the *CONTROL FOOTING* group. *COBOL Report Writer allows you to produce totals from virtually any numeric fields*, and you may do it in any *TYPE* of group. To produce a total, follow these two simple steps:

1. Put a *data-name* at the front of the entry you want totalled.

2. In another entry, use the clause: *SUM OF data-name* instead of *SOURCE* or *VALUE*.

First, you must go back to our coding for the DETAIL group above and add a data-name to the entry for *ORDER-VALUE*. For example, you could re-write the last entry as:

```
  05 REP-ORD-VAL  COL 41  PIC $(5)9.99  SOURCE ORDER-VALUE.
```

where *REP-ORD-VAL* is a new data-name of your choice. Now you can code the CONTROL FOOTING group for our layout:

**(C)**

```
01  TYPE CF.
  03  LINE + 3.
   05  COL 16   VALUE "TOTALS: DEPOT".
   05  COL + 2  PIC X(10)      SOURCE DEPOT.
   05  COL 41   PIC $(5)9.99   SUM OF REP-ORD-VAL.
  03  LINE.
   05  COL 41   VALUE "=========".
```

You may have any number of CONTROLS in your program, and you may have a *CONTROL HEADING* as well as a *CONTROL FOOTING* report group for each control.

**Step 5: Code the SELECT...ASSIGN and FD**

COBOL Report Writer requires a **standard COBOL file** to which to write your output. So, to begin with, you need a *SELECT...ASSIGN* clause and an *FD* . The FD entry may contain any clauses that you would normally use for a report file, plus a new clause:

*REPORT IS name-of-report*. You should not need a record description to follow. For our example, you might write:

**(D)**

```
IDENTIFICATION DIVISION.
... (other paragraphs as normal) ...
FILE-CONTROL.
     SELECT COOKIE-FILE ASSIGN TO UT-S-DATAIN.
     SELECT STOCK-PRINT ASSIGN TO UT-S-LIST01.
DATA DIVISION.
FILE SECTION.
FD  COOKIE-FILE.
    ... (description as in step 4C) ...
FD  STOCK-PRINT
    ...
    REPORT IS STOCK-SUMMARY.
WORKING-STORAGE SECTION.
01  WS-EOF           PIC X   VALUE "N".
```

**Step 6: Code the PROCEDURE DIVISION**

**Report Writer is entirely under the control of your program**, but at a higher level than is the case with elementary COBOL. This means that no action will be taken until your program executes a report writer *statement*. There are three of these:

1. **INITIATE** *name-of-report*

This statement initializes your report at the start of the whole process. Your program must do this before it is allowed to execute any other report writer statements. It does not open the file. *Name-of-report* is the data-name you wrote right after the *RD*.

2. **GENERATE** *detail-name*

This statement generates one instance of a DETAIL report group. *Detail-name* is the data-name you used to name your DETAIL report group. The GENERATE also performs all the other actions that might be necessary before the DETAIL report group is output, namely:

It tests for *control breaks* (if your report has a *CONTROL* clause) and, if necessary, produces *CONTROL FOOTING* and *CONTROL FOOTING* report groups.

It checks that your DETAIL report group will fit completely on the current page (assuming that your report has a *PAGE* clause). If not, it produces your *PAGE FOOTING* report group (if there is one defined in your report), advances to a new page and produces your *PAGE HEADING* report group (if there is one defined in your report). Unless you explicitly allow it with a *MULTIPLE PAGE* clause, report writer never splits your report group over two pages.

If it is the **first occasion** after the INITIATE, the GENERATE statement will output any *REPORT HEADING*, your *PAGE HEADING*, and all your *CONTROL HEADING* groups before generating your DETAIL report group.

Your *CONTROL HEADING* and *CONTROL FOOTING* report groups are also subject to the page-fit test. They are treated similarly to DETAIL report groups. These three *TYPE*s are often referred to as *body groups*, because they fit into the "*body*" of the page (between the *PAGE HEADING* and *FOOTING*) and usually contain the most important information.

3. **TERMINATE** *name-of-report*

This statement ends your report and produces any final items that are required at the end of the report, namely:

- All CONTROL FOOTINGs up to the highest level defined;
- The last PAGE FOOTING (if defined);
- The REPORT FOOTING (if defined).

To produce output for a simple report layout from standard files, the following logical structure should apply:

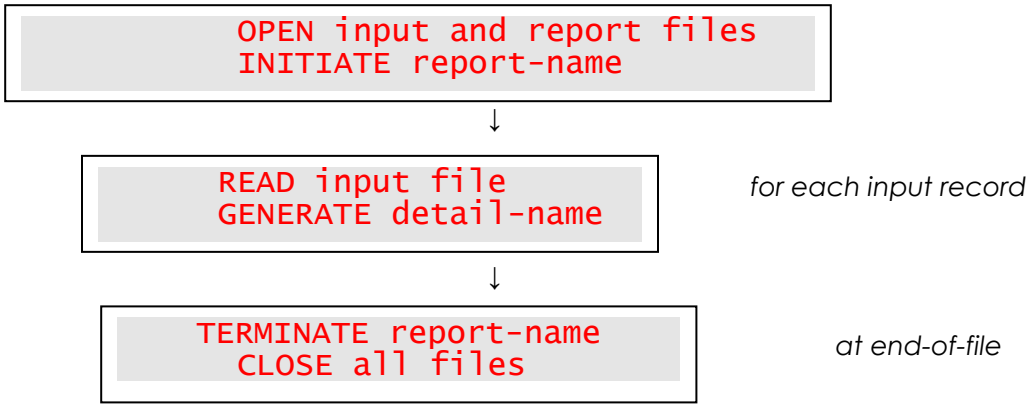


If your input is from a *database*, or reaches your program's DATA DIVISION by some means other than from a standard file, you will need to replace the *OPEN* and *CLOSE* for the input files and the *READ* by more appropriate statements.

To produce a more complex layout, you would probably define several different *DETAIL* report groups and decide in your program when to *GENERATE* one or the other. For our example, the following would be a suitable complete PROCEDURE DIVISION:

**(E)**

```
PROCEDURE DIVISION.
PROGRAM-START.
    OPEN INPUT COOKIE-FILE, OUTPUT STOCK-PRINT
    INITIATE STOCK-SUMMARY
    PERFORM NEXT-RECORD
    PERFORM GENERATE-LINE THRU NEXT-RECORD
      UNTIL WS-EOF = "Y"
    TERMINATE STOCK-SUMMARY
    CLOSE STOCK-PRINT, COOKIE-FILE
    STOP RUN.
GENERATE-LINE.
    GENERATE COOKIE-LINE.
NEXT-RECORD.
    READ COOKIE-FILE AT END MOVE "Y" TO WS-EOF.
```

Place this code after the code in the code samples (D), (A), (B) and (C) (in that order) and you have a complete program.

You may use report writer "*verbs*" just as you would use any other PROCEDURE DIVISION statements. **So your program may do many other tasks apart from just producing your report output.**

## 1.3 More about COBOL Report Writer

### 1.3.1 More about Files and Reports

You may describe **as many reports as you like** per program. Each report has its own *RD* entry, followed by one or more *Report Group Descriptions*. Separate reports may either be assigned to separate files or to the same file, in which case you could write:

```
FD  PRINT-FILE
    REPORTS ARE MAIN-REPORT, SUMMARY-REPORT.
```

This last approach is useful where you need to produce a report that has distinct sections, perhaps with different page headings. So a single **physical** report (as the end-user sees it) may consist of several different **logical** reports (as the programmer sees them), all written to the same file.

You can also direct your report output to a special *Independent Report File Handler*, designed to process the output from reports in a particular way. To use the special file handler, write the extra clause: *MODE IS mnemonic-name* in the *SELECT* clause. It does not affect the *FD* or any other statements in your program.

### 1.3.2 More about the RD Entry

Apart from the clauses used in our example, there are several other clauses that you may write in your RD entry. They are all explained in detail in the chapter *Report Files and RD Entries*. Here is a brief summary:

**LAST DETAIL** gives the last line on which a *DETAIL* or *CONTROL HEADING* report group may appear.

**LAST CF** (or LAST CONTROL FOOTING or just FOOTING) gives the last line on which a *CONTROL FOOTING* group may appear. If you do not specify it, a default value is assumed for it. You can use it to ensure that a CONTROL FOOTING will never appear at the top of a page (since there will always be space reserved for it at the bottom of the previous page).

**OVERFLOW** and **SUM OVERFLOW** enable you to specify the action that takes place if any *arithmetic expressions* or totals defined in your report groups are too large for the report field or involve dividing by zero.

**CODE** is used when your output report data must have extra unprinted information placed at the start of each record, or when you need to pass information to a special Independent Report File Handler (see *Independent Report File Handlers*). For example, if your installation has provided a file handler to do spooling and restart, you may be required to provide a key by which restart would be done. You would then write: *CODE IS name-of-key-field*.

**ALLOW SOURCE SUM CORR** and **ALLOW NO SOURCE SUM CORR** determine whether the ANS-68 or the ANS-85 rules will be used for calculating certain SUM fields. ALLOW NO SOURCE SUM CORR is assumed in default in the version as supplied A description of this process will be found in *Installation and Operation*. .

**GLOBAL** makes the report available to nested programs.

### 1.3.3 More about CONTROLS

Each RD entry may have a *CONTROL* clause, and you may write the names of **any number** of fields in your program. Your control fields must have a *hierarchy* and must be listed in order from the **highest** down to the **lowest**. When your program issues a *GENERATE*, report writer tests each control field in order, beginning with the highest. If it detects a change (a *control break*), this process ends. Report writer will then automatically take additional action before it produces the DETAIL group, depending on which CONTROL FOOTING or CONTROL HEADING report groups (if any) you defined.

COBOL Report Writer keeps an internal copy of each of your control fields so that it can test for a control break by comparing them with the new values on each GENERATE. Before it produces your CONTROL FOOTING report groups, it temporarily stores these previous values back into the control fields. So if your CONTROL FOOTING refers to a control field, as a SOURCE for example, you will get the previous or *pre-break* value, even though the original control field has changed in value.

You may also want a major heading and a major footing at the very start and end of your report. For example, you may want to produce *grand totals* for the entire report. If so, you may use the reserved word *REPORT* or *FINAL*. This is the highest possible control level. If you use it, it must therefore be first in the list of controls in your CONTROLS clause.

There may be fields other than totals or lines that should be produced **only once after a control break**. These may be inside a report group, where you cannot make use of a separate CONTROL HEADING. You can define them by writing:

```
    PRESENT AFTER NEW name-of-control-field
or  ABSENT AFTER NEW name-of-control-field
```

The field or line will then appear only on the first occasion after a control break at the level you indicate. (Alternatively, if you use ABSENT AFTER..., the field or line will not appear the first time and will appear every time thereafter until the next control break.) You may also write *PRESENT* or *ABSENT AFTER NEW PAGE*, indicating that you want the field or line to appear (or disappear) only on the first occasion after a *page advance*. Finally, you may code both the control-field and PAGE operands in one clause.

It is possible for a report to have no DETAIL groups at all. This case is called *summary reporting*. The only *body groups* coded are CONTROL FOOTING - and possibly CONTROL HEADING - groups. Therefore, since you have no name of a DETAIL group to give in your GENERATE statement, you write: *GENERATE report-name*.

The next example illustrates all the points made in this section. There are three levels of control, including REPORT, each with a CONTROL FOOTING.

```
 SPORTS CLUB: TENNIS SECTION
 SUBSCRIPTIONS:   FULL      OFF-PEAK

 1997 JAN         $4000       $10000
      FEB         $3000        $9000
      MAR         $1500        $8000
      APR         $1000        $3000
      ...          ...          ...
      DEC         $1500        $5500

 1997 TOTALS:    $26500       $43000
                 ======       ======

 1998 JAN         $2000        $8000
      FEB         $2500        $9500
      ...          ...          ...
      DEC         $2000        $4500

 1998 TOTALS:    $34700       $12800
                 ======       ======

GRAND TOTALS:    $61200       $55800
```

```
 RD  SUBSCRIPTIONS
     FIRST DE 4  PAGE LIMIT 60
     CONTROLS REPORT, YEAR, MONTH.
 01  TYPE PH ... etc ...
 01  TYPE CF FOR MONTH    LINE + 1.
     05  COL 1   PIC 9(4) SOURCE YEAR
         PRESENT AFTER NEW YEAR.
     05  COL 6   PIC XXX
         SOURCE W-MONTH-NAME (MONTH).
     05  COL 16  PIC $(5)9 SUM OF FULL.
     05  COL 28  PIC $(5)9 SUM OF OFFP.
 01  TYPE CF FOR YEAR NEXT GROUP + 1.
   03  LINE + 2.
     05  COL 1   PIC 9(4) SOURCE YEAR.
     05  COL 6   VALUE "TOTALS:".
     05  COL 16  PIC $(5)9 SUM OF FULL.
     05  COL 28  PIC $(5)9 SUM OF OFFP.
   03  LINE + 1  COLS 16 28
         VALUE "======".
*Blank line:
   03  LINE + 1.
 01  TYPE CF FOR REPORT    LINE + 1.
     05  COL 16  PIC $(5)9 SUM OF FULL.
     05  COL 28  PIC $(5)9 SUM OF OFFP.
 PROCEDURE DIVISION.
     ...
     GENERATE SUBSCRIPTIONS
```

There is much more about CONTROLS in the main section (see 2.6 *CONTROL clause*).

### 1.3.4 More about TYPEs

In the diagram on the next page, you can see all **seven** types of report group in use in the same layout. You may choose any or all of the seven types in a report, and none of them are compulsory (except that you must have at least one *body group* (CH, DE, or CF)). You cannot have more than **one** *REPORT HEADING*, *PAGE HEADING*, *PAGE FOOTING*, and *REPORT FOOTING*, and you cannot have more than **one** *CONTROL HEADING* and *CONTROL FOOTING* for **each** control level. But you can code **any number** of DETAIL groups.

If your report needs a particularly long or complex REPORT HEADING or REPORT FOOTING, or if your report layout changes completely at a later stage, code a second **separate RD** with its own *Report Group Descriptions* following and expand the REPORT clause of your FD to include the second report-name. (You may associate as many RDs as you like with the same FD.) For further details, see 2.2 *Report Files*, 2.3 *REPORT SECTION and RD*, and 5.1 *Multiple Reports*.

```
 SPORTS CLUB EXPENSES SUMMARY
              1999
```

```
SPORTS CLUB EXPENSES      PAGE 1

SPORT: GOLF
=====

JAN
---

 01    MOLE DAMAGE          $350
 23    NEW CAR PARK        $2250
--------------            ------
JAN GOLF TOTAL            $2600
--------------            ------

FEB
---
 ..    .....
---------                 ------
DEC TOTAL                  $1400
---------                 ------
YEAR GOLF TOTAL           $15000
===============           ------

SPORT: CRICKET
=====
JAN
---

                  CONTINUED ...
```

```
    END OF EXPENSES SUMMARY
```

**Report showing all 7 TYPEs of group:**

TYPE RH or REPORT HEADING

TYPE PH or PAGE HEADING

TYPE CH FOR SPORT
or CONTROL HEADING FOR SPORT
(*higher control heading*)

TYPE CH FOR MONTH
or CONTROL HEADING FOR MONTH
(*lower control heading*)

TYPE DE or DETAIL

TYPE CF FOR MONTH
or CONTROL FOOTING FOR MONTH
(*lower control footing*)

TYPE CF FOR SPORT
or CONTROL FOOTING FOR SPORT
(*higher control footing*)

TYPE PF or PAGE FOOTING

TYPE RF or REPORT FOOTING

### 1.3.5 Automatic Repetition

If your report has a series of fields or lines or groups of similar layout or format, it is usually possible to save time in coding by writing one **multiple** clause instead of several entries with single-operand clauses. Here is a list of cases:

A. **VALUES** in Consecutive Fields

If you have **consecutive** fields in a line containing literals, you may code *multiple COLUMNS* and *VALUE* clauses to avoid writing several entries:

```
SPORTS CLUB SUBSCRIPTIONS
TENNIS   GOLF   SWIMMING   CRICKET
```

```
03  LINE + 1.
  05  COLS 1 9 15 25
  VALUES "TENNIS" "GOLF"
    "SWIMMING" "CRICKET".
```

B. **SOURCES** in Consecutive Fields, with Same PICTURE

If you have several consecutive fields in a line with the **same PICTURE** (or if you can expand shorter PICTUREs to match longer ones), you may code *multiple COLUMNS* and *SOURCE* clauses in one entry:

```
SPORTS CLUB SUBSCRIPTIONS
TENNIS   GOLF   SWIMMING   CRICKET

$238    $340     $500       $350
```

```
05  COLS 1 8 16 26  PIC $$$$9
SOURCES TENNIS GOLF SWIMMING
CRICKET.
```

Here, as usual, each *SOURCE* field is a data item defined in the DATA DIVISION of your program (in this particular case, a numeric item). *VALUE* and *SOURCE* clauses cannot be combined within the same multiple clause.

Using a single entry like this also makes it easy to **total** a series of fields by coding just one *SUM* entry:

```
SPORTS CLUB SUBSCRIPTIONS
TENNIS   GOLF   SWIMMING   CRICKET      TOTAL

$238    $340     $500       $350        $1428
```

```
05  R-SUBS  COLS 1 8 16 26       PIC $$$$9
          SOURCES TENNIS GOLF SWIMMING CRICKET.
05  COL 35                       PIC $(5)9     SUM OF R-SUBS.
```

If separate entries are used, you would have to total them by writing either: *SOURCE TENNIS + GOLF + SWIMMING + CRICKET*, or *SUM R-TENNIS R-GOLF R-SWIMMING R-CRICKET*, placing these data-names on the entries in turn.

C. Regularly Spaced COLUMNS

If the gap between successive fields is **regular**, you need not give a COLUMN for each one. Instead, you can combine an *OCCURS* clause and a *STEP* phrase:

```
SPORTS CLUB SUBSCRIPTIONS
 TENNIS   GOLF   RUGBY   SQUASH
  $238    $340    $500    $350
```

```
05 COL 1 OCCURS 4 STEP 7 PIC $$$$9
   SOURCES TENNIS GOLF RUGBY SQUASH.
```

You can also use OCCURS with a relative COLUMN to provide the gap, in which case the STEP phrase is unnecessary.

D. Repeating the Same VALUE

You can combine a single *VALUE* with an *OCCURS* clause or a *multiple COLUMNS* clause, in which case the VALUE is simply repeated:

```
 ($)      ($)      ($)      ($)
 238      340      500      350
```

```
05  COL 2   OCCURS 4 STEP 8   VALUE "($)".
(or 05  COLS 2, 10, 18, 26  VALUE "($)".)
```

A single-operand *SOURCE* field can be similarly repeated, although the occasions for doing so are rarer.

E. Repeating LINE

The LINE clause also has a multiple form. You may also combine an *OCCURS* clause with a *single-operand LINE* clause. (In the latter case, if you use *STEP* , as you must if the LINE is **absolute**, it refers to the **vertical** distance.) If you use a *SOURCE*, the entire table of SOURCE items must be "read into memory" first. Within the repeating LINE, you may have multiple VALUES and SOURCES clauses. This enables you to improve clarity by *stacking* your heading values in one place:

```
   NEW        OLD       MEMBERS
MEMBERS    MEMBERS     LEAVING
```

```
03  LINES 2, 3.
    05  COL 1  VALUES "  NEW"
                       "MEMBERS".
    05  COL 10 VALUES "  OLD"
                       "MEMBERS".
    05  COL 19 VALUES "MEMBERS"
                       "LEAVING".
```

(You don't **have** to code the literals vertically like this, but it does help the eye.)

F. Variable Number of Repetitions

If the number of repetitions is **variable**, you should use the OCCURS clause's keyword *TO* and *DEPENDING ON* phrase, whose operand can be any data-name or arithmetic expression. Report writer will then dynamically calculate the **actual** number of repeats

present on each occasion. It is valid for there to be no occurrences, so your minimum can be zero. Any "unused" repeats are treated as *ABSENT*:

```
FAMILY MEMBERSHIPS                                  AMOUNT DUE

JONES      PETER     MARY      IAN       SARAH        $240
SMITH      ALAN      DEBBIE                           $120
ROBERTS    SUSAN     TOM       IONA                   $180
```

```
03  LINE.
  05 COL 1    PIC X(10)   SOURCE SURNAME.
  05 COL 11   PIC X(8)
     OCCURS 2 TO 4 DEPENDING ON NO-MEMBERS-IN-FAMILY
     STEP 9   VARYING FORENAME-SUB
     SOURCE FORENAME (FORENAME-SUB).
  05 COL 50   PIC $(4)9  SOURCE NO-MEMBERS-IN-FAMILY * SUBSCRIPTION.
```

The same method can be used for LINEs. If a *body group* has a **variable** number of lines and they are all **relative**, report writer will take into account **only those lines actually present** when applying its page-fit test.

G. SOURCE Items in a Table

If you need to output SOURCE items that are held in a table, report writer will automatically **vary** an internal data-name which you can then use as a subscript. You can specify a *FROM* value for the starting point and a *BY* value for the increment for your subscript, but these are assumed to be ***1*** if you omit them:

```
SPORTS CLUB SUBSCRIPTIONS
 TENNIS   GOLF   RUGBY   SQUASH
 $238    $340    $500    $350
```

```
05  COL 1  OCCURS 4  STEP 7
    VARYING SPORT-NO   PIC $$$$9
    SOURCE SPORT (SPORT-NO).
```

You choose your own data-name for the VARYING clause, but it must **not** be defined anywhere as a data item in your program. You can reuse the **same data-name** many times in the REPORT SECTION, except where the VARYING clauses are *nested*.

You may combine VARYING with a *multiple COLUMNS* or *LINES* clause, as well as with an OCCURS clause, and you may output results in more than one dimension. In the next example, the *SPORT* fields are printed in **reverse** order:

```
SPORTS CLUB 4-YEAR SUBSCRIPTIONS
       SQUASH  RUGBY  GOLF  TENNIS

 1996   $180   $300   $445   $290
 1997   $196   $280   $440   $310
 1998   $223   $320   $450   $320
 1999   $238   $340   $500   $350
```

```
03  LINE  OCCURS 4      VARYING YEAR-NO.
    05  COL 2  PIC 9(4)  SOURCE 1988 + YEAR-NO.
    05  COL 8  OCCURS 4  STEP 7  VARYING SPORT-NO FROM 4 BY -1
                PIC $$$$9 SOURCE SPORT (YEAR-NO, SPORT-NO).
```

H. Repeating Whole Groups Horizontally

The *REPEATED* clause enables you to place **whole groups side-by-side**. On each GENERATE, report writer will place the group in an internal buffer, until the last of each set arrives, whereupon the whole set will be printed side-by-side. You should define **only the left-hand group**.

```
                    CRICKET FIXTURES

 1ST TEAM VS OLD C.T.'S          2ND TEAM VS S.RICHMOND
 ON 21ST APRIL                   ON 21ST APRIL
 AWAY                            HOME

 1ST TEAM VS OLD C.T.'S          2ND TEAM VS S.RICHMOND
 ON 28TH APRIL                   ON 28TH APRIL
 HOME                            AWAY
```

```
01  CRICKET-FIXTURE  TYPE DE  REPEATED 2 TIMES EVERY 30 COLS.
    03  LINE + 3.
      05  COL 4      VALUE "1ST"   WHEN REPEATED-COUNTER = 1
                     VALUE "2ND"   WHEN OTHER.
      05  COL 8      VALUE "TEAM VS".
      05  COL + 2    PIC X(10)     SOURCE OPPONENTS-NAME.
   03  LINE + 1 ... etc ...
   03  LINE + 1 ... etc ...
```

If a **different** DETAIL group is GENERATEd - say SOCCER-FIXTURE - or if your program issues a TERMINATE, and there are still left-hand groups in the buffer, these buffered groups are output first, padded out with blank entries on the right where necessary.

I. Different Levels Using the same CONTROL FOOTING

You will have noticed from some of the preceding examples that a **lower** CONTROL FOOTING and a **higher** CONTROL FOOTING often have a very similar layout and you may wish you could code a **single** report group and use it for any number of control levels. You can do this simply by listing more than one control in the TYPE clause, for example **TYPE CF FOR REPORT, YEAR, MONTH** or just **CF FOR ALL**. Any SUM totals are then automatically rolled forward up to each higher level. If any CONTROL FOOTING has a different layout from the others, you can use **PRESENT WHEN CONTROL IS YEAR**, **PRESENT WHEN CONTROL IS MONTH**, and so on to vary it.

### 1.3.6 More about Totalling

There are many other ways to use the *SUM* clause to produce totals. As well as totalling from one group to another, you may form totals within the **same group**. Here's how you might enhance our four-yearly table with row and column totals. (Absorb this example slowly.)

```
SPORTS CLUB 4-YEAR SUBSCRIPTIONS
       SQUASH   RUGBY   GOLF   TENNIS    TOTAL

  1996   $180    $300    $445    $290    $1215
  1997   $196    $280    $440    $310    $1226
  1998   $223    $320    $450    $320    $1313
  1999   $238    $340    $500    $350    $1428

        -----   -----   -----   -----    -----
 TOTALS  $827   $1240   $1835   $1270    $5182
```

*(Totals may also be specified at the top or on the left.)*

```
03  LINE  OCCURS 4       VARYING YEAR-NO.
  05  COL 2  PIC 9(4)    SOURCE 1995 + YEAR-NO.
  05  R-VAL  COL 8  OCCURS 4    STEP 7
      VARYING SPORT-NO FROM 4 BY -1
      PIC $$$$9  SOURCE SPORT (YEAR-NO SPORT-NO).
  05  COL 37 PIC $(5)9  SUM OF R-VAL.
03  LINE      COLS 8 15 22 29 37   VALUE "-----".
03  LINE.
  05  COL 1  VALUE "TOTALS".
  05  T-VAL  COL 8  OCCURS 4 STEP 7  PIC $$$$9  SUM OF R-VAL.
  05  COL 37 PIC $(5)9  SUM OF T-VAL.
```

Report writer totals repeating values automatically along the horizontal or vertical **axes**. Notice that you should **not** place any subscripts after the data-name that is the operand of the SUM clause.

A *SUM* may be combined in an entry with a *multiple COLUMN* (or *LINE*) clause to give you a series of totals of another repeating entry with the same number of repetitions, as you see in the last line of this example:

```
          CLUB OUTGOINGS IN 1999
  MONTH   BUILDINGS   INTERIOR   WAGES      TAX

   JAN       $80        $445     $2290     $121
   FEB      $170        $350      $440    $2260
   ...       ...         ...       ...      ...
   DEC      $190        $440     $2260    $1130
            -----       -----     -----    -----
TOTALS    $3120       $1240    $13250   $34930
```

```
03  LINE            OCCURS 12  VARYING MONTH.
  05  COL 2         PIC XXX    SOURCE WS-MONTH-NAME (MONTH).
  05  R-OUTGOINGS COLS 10 20 29 37  PIC $(5)9
                   SOURCES BUILDINGS INTERIOR WAGES TAX.
...
03  LINE.
  05  COL 2         VALUE "TOTALS".
  05  COLS 9 19 28 36  PIC $(6)9    SUM OF R-OUTGOINGS.
```

The total line may also be in a **different group** from the repeating line. If so, you might then remove the *OCCURS 12* on the first LINE entry and GENERATE the group containing it 12 times.

As well as totalling a field using SUM, you may *count* the occurrences using the *COUNT* clause. COUNT simply adds 1 each time instead of the value of the field. You may COUNT the number of times any REPORT SECTION item appears, including LINEs or whole groups. All multiple occurrences contribute to the COUNT.

You may use SUM and COUNT as *terms* of a SOURCE expression. Be sure to enclose each term in parentheses. For example, to find the *average* amount of the subscription of our four sports above, you may write:

```
01  MAIN-GROUP  TYPE DE.
    05  R-SUBS  COL 1   PIC $$$$9  SOURCE SPORT-SUBSCRIPTION.
     ...
 01  TYPE CF.
     05  COL 1   PIC $$$$9
     SOURCE IS  (SUM OF R-SUBS) / (COUNT OF R-SUBS)  ROUNDED.
```

(As usual, the words *SOURCE IS* are optional.) If the divisor (the *COUNT* term above) happens to be zero, report writer will detect the error, unless you write **OVERFLOW PROCEDURE IS OMITTED** in your RD statement. The action taken depends on what, if anything, you coded in the OVERFLOW PROCEDURE clause. (By default, report writer will detect the error and write an error message on your terminal or job log, leaving the field blank.)

You may also total numeric fields directly from other sections in your DATA DIVISION. (With the older ANS COBOL report writer this method was **necessary** to obtain totals. You coded the name of the FILE, WORKING-STORAGE, or LINKAGE SECTION item as an operand of the SUM clause in the lowest-level CONTROL FOOTING.) With such external items, you **may** use subscripts, and you may also SUM an *arithmetic expression*; for instance:

```
05  COL 1   PIC ZZZ9   SUM OF (WS-INCOME - WS-TAX).
```

If the item does **not** already appear as a SOURCE, this is the **only** method of totalling it. So this technique is useful where you require totals of a field but do **not** want to show the individual values that were added to produce the total. Its main disadvantage is that it may not be clear to the reader of your program exactly **when** the values are added into the total. See the remainder of this publication for a discussion of the relevant rules.

### 1.3.7 More about Conditional Entries

You have already seen how a **single** COBOL condition may be used to decide whether to output a report field. *Multiple-choice* entries are used when you have several possible contents for a field. Just write a series of SOURCE or VALUE clauses, each followed by *PRESENT WHEN condition*. (The keyword *PRESENT* is often omitted in a multiple-choice entry.) The period does not come until the end. Report writer examines all the conditions in sequence until it finds the first that is **true** and then uses the VALUE or SOURCE associated with that true condition. *WHEN OTHER* can be used to indicate "*when none of the given conditions is true*". (Compare the use of *ELSE* in elementary COBOL.) Study the following example:

```
                    NEW MEMBERS
TITLE/NAME          PAY MONTHLY       AMOUNT DUE
                    OR YEARLY?
MR. CODER               M                $10
MISS PROGRAMMER         Y               $120
ANALYST                 Y               $160
```

```
03  LINE.
    05  COL 1      VALUE "MR. "     WHEN TITL = 1
                    VALUE "MRS. "    WHEN TITL = 2
                    VALUE "MISS "    WHEN TITL = 3
                    VALUE "DR. "     WHEN TITL = 4.
*NB: One period after last item!
    05  COL +1     PIC X(12)        SOURCE SURNAME.
    05  COL 24     VALUE "M"        WHEN YEARLY-FLAG = 0
                    VALUE "Y"        WHEN OTHER.
    05  COL 40     PIC $$$$9
                SOURCE (SUBSCRIPTION / 12) WHEN YEARLY-FLAG = 0
                SOURCE SUBSCRIPTION  WHEN OTHER.
```

Note that the third person in our list, *ANALYST*, has no title because there is no *WHEN OTHER* ("*catch-all*") in the choice of titles.

You may produce many useful effects with the PRESENT WHEN clause by causing fields or lines, relative or absolute, to appear or disappear at certain times. If a relative entry (COLUMN + ... or LINE + ...) follows an entry that may or may not be PRESENT, its position is **variable**:

```
UNPAID SUBSCRIPTIONS
 TESTER      ( CRICKET SQUASH ): $250
 CODER       ( RUGBY ): $100
 ANALYST     ( TENNIS SQUASH RUGBY ): $450
```

```
 03  LINE.
   05  COL 1  PIC X(10)   SOURCE SURNAME.
   05  COL 12 VALUE "( ".
   05  COL +1 VALUE "CRICKET " PRESENT WHEN CRICKET-FLAG = 1.
   05  COL +1 VALUE "TENNIS "  PRESENT WHEN TENNIS-FLAG = 1.
   05  COL +1 VALUE "SQUASH "  PRESENT WHEN SQUASH-FLAG = 1.
   05  COL +1 VALUE "RUGBY "   PRESENT WHEN RUGBY-FLAG = 1.
   05  COL +1 VALUE "):".
   05  COL +2    PIC $$$9    SOURCE UNPAID-SUBS.
```

The *ABSENT WHEN* clause has the same effect as PRESENT WHEN except that you write the **negative** condition. Other conditional clauses are *PRESENT AFTER* (previously known as *GROUP INDICATE*) and ABSENT AFTER. Instead of checking a standard COBOL condition, these clauses test whether there has been a page advance or a control break since the group was last produced. You may write **PRESENT AFTER NEW PAGE**, **PRESENT AFTER NEW control-id**, or **PRESENT AFTER NEW control-id OR PAGE**:

```
              SURVEY OF MEMBERSHIP
YEAR   MONTH    GOLF   RUGBY   TENNIS   SQUASH

1997     JAN     350     100     500     250
         FEB     360     120     450     260
         ...     ...     ...     ...     ...
         DEC     340     125     250     360
1998     JAN     360     105     400     150
         FEB     260     150     250     260
```

*Without the PRESENT AFTER clause, the YEAR would appear on each line.*

```
              SURVEY OF MEMBERSHIP
YEAR   MONTH    GOLF   RUGBY   TENNIS   SQUASH

1999     MAR     250     130     400     350
         APR     380     100     650     190
         ...     ...     ...     ...     ...
```

```
 RD  MEMBERS-SURVEY
     PAGE LIMIT 60   LINE LIMIT 132
     CONTROL IS YEAR-NO.
 01  SURVEY-FIGURES  TYPE DE    LINE + 1.
     05  COL 1       PIC 9(4)
     SOURCE YEAR-NO PRESENT AFTER NEW YEAR-NO OR PAGE.
```

## 1.4 Some Shorter Forms

COBOL Report Writer offers you several ways to **shorten** the amount of code you write. You have already seen several, such as shortening *COLUMN* to *COL*. Of course, the shorter forms may not always be clearer, and you may decide not to adopt them all. Here are some of them:

**1.** The keywords *TYPE*, *SOURCE*, *VALUE*, and *PRESENT* may be omitted. This reduces your coding effort at a cost of making your program less readable to a maintenance programmer unfamiliar with report writer.

**2.** If you do **not** code a *TYPE* clause in a level-01 entry, *TYPE DETAIL* is implied.

**3.** You may write *LINE* and *COLUMN* (or *COL*) in the same entry, provided that there is only one item in the LINE. So you could code:

```
   03  LINE + 1   COL 20    VALUE "GOLF".
```

instead of:

```
03  LINE + 1.
     05  COL 20   VALUE "GOLF".
```

If there is second item in the line, this second method is the only way.

**4.** You may code the LINE clause in the level-01 entry, provided that there is only one LINE in the report group. So you could code:

```
 01  ACCOUNT-ENTRY    TYPE DE    LINE + 1.
```

instead of:

```
01  ACCOUNT-ENTRY    TYPE DE.
     05  LINE + 1.
```

If there is another LINE in the report group, this second method is the only way.

# 1.5 Other Features

## 1.5.1 Variable-Length Fields

If any of your report fields are to take up a variable number of columns, use the *left-shift* (or "*squeeze*") symbols "<" and ">" in the *PICTURE*. The examples below show the effect of these symbols:

```
               MEMBERS AND CHILDREN'S AGES

CODER: MANDY(7), TOM(5).
TESTER: ALAN(11), HILARY(9), JASON(8).
ANALYST: ANGELO(8).
```

```
03  LINE.
  05  COL 1        PIC <X(12)> SOURCE SURNAME.
  05  COL + 1      VALUE ": ".
  05  OCCURS 1 TO 9 DEPENDING ON NUMBER-OF-CHILDREN
      VARYING R-CHILD-SUB.
    07  COL + 1    PIC <X(8)>  SOURCE FORENAME (R-CHILD-SUB).
    07  COL + 1    VALUE "(".
    07  COL + 1    PIC <9>9    SOURCE AGE (R-CHILD-SUB).
    07  COL + 1    VALUE ")".
    07  COL + 1    VALUE ", "  WHEN R-CHILD-SUB < NUMBER-OF-CHILDREN
                    VALUE "."   WHEN OTHER.
```

The reason why **PIC <9>9** was coded rather than **PIC <99>** against the child's age is to prevent a value of zero from causing the field to vanish completely. In the other cases, the closing ">" symbol is optional.

Now imagine this same code with all the "<" and ">" symbols removed from the PICTUREs. This is what would appear:

```
MEMBERS AND CHILDREN'S AGES

 CODER        : MANDY    (07), TOM      (05).
 TESTER       : ALAN     (11), HILARY   (09), JASON    (08).
 ANALYST      : ANGELO   (08).
```

## 1.5.2 Insertion Characters

As well as by using standard PICTURE symbols such as "/", "0" and "B", you can place any additional characters into your report field by placing them within "*quotes*" (or '*apostrophes*' ) within the PICTURE. For example, to print a percentage:

```
PIC ZZZ9.99"%" SOURCE 100 * COST / TOTAL ROUNDED
```

### 1.5.3 COLUMN CENTER and RIGHT

You can specify the *center* or the *right-hand* column as an anchor point, rather than just the left-hand column. To do so, write **COLUMN CENTER** or **COLUMN RIGHT**. (CENTRE is an alternative spelling.) In the case of COLUMN CENTER, if your field has an **even** number of characters, the odd character goes on the **right**. This feature saves you time when you are working with fields of different lengths, in different lines, that should appear centered or right-aligned in a "*stack*". It also simply saves you the effort of counting out the length of a field in order to center it. See the following cases, all of which produce the same result:

```
              Expenditure
              ▲    ▲    ▲
        COL 15     |    COL RIGHT 25
           COL CENTER 20
```

If your field is **variable-length**, report writer first takes the actual size of the field before it positions it. In this way a name, title, etc. can be centered or right-aligned:

```
                JOHN CODER
           12 WALLINGTON ROAD
                  EGHAM
```

```
03  LINE OCCURS 1 TO 5 DEPENDING ON NO-OF-ADDR-LINES
         VARYING R-ADDR-LINE.
 05  COL CENTER 20  PIC <X(32)  SOURCE ADDR-LINE (R-ADDR-LINE).
```

### 1.5.4 NEXT GROUP Clause

Use this clause when you want to create extra space between report groups or when you need to ensure that a particular report group is the last on the page, perhaps the CONTROL FOOTING of a major control. With new Report Writer, this clause is necessary **only with body groups**. It has the useful property that, if there is a higher-level control break, the lower-level CONTROL FOOTING group does not affect the higher-level one, so that, if there is room, they normally remain together on the same page.

Write the clause in your *01*-level entry for the group. The form *NEXT GROUP + integer* will create *integer* extra blank lines following the group, provided it is not the last on the page. The form *NEXT GROUP NEXT PAGE* causes your group to be the last on its page.

### 1.5.5 GROUP LIMIT Clause

You may not want some particular report groups to appear below a certain line on the page. For example, a CONTROL HEADING would seem out of place if it were last on the page. Just code GROUP LIMIT IS integer in the *01*-level entry of your group. *Integer* will then be the bottom line number allowed for the last line of the group. See immediately below for an example.

### 1.5.6 CONTROL HEADING at Top of Every Page

Many report layouts have CONTROL HEADING groups that have to appear at the **top of each page** as well as after a control break. If this is required, just write the words **OR PAGE** after the control-name in the TYPE clause of your CH group. The following diagram shows this effect, and also illustrates the *GROUP LIMIT* clause that we discussed above (see 1.5.5 *GROUP LIMIT Clause*).

```
         CLUB EXPENDITURE 1999

SPORT: GOLF
=====
21 MAR   BUNKERS RESURFACED     $1500
04 AUG   COFFEE ROOM TABLES      $260
.. ...    ....
12 DEC   XMAS DECORATIONS        $500

SPORT: RUGBY
=====
03 JAN   REPAIR GOALPOSTS        $500
11 FEB   BARSTOOLS                $80
```

*Because of the GROUP LIMIT, the CONTROL HEADING will not appear after line 57.*

```
         CLUB EXPENDITURE 1999

SPORT: RUGBY   (CONT.)
=====
22 APR   REPAIR SHOWERS          $390
```

*A CONTROL HEADING re-appears because of the new page even though no control break occurred.*

```
RD  CLUB-EXPENDITURE
    PAGE LIMIT 60   FIRST BODY GROUP 3   LINE LIMIT 132
    CONTROL IS SPORT.
...
01  TYPE CH FOR SPORT OR PAGE
    GROUP LIMIT 58.
  03  LINE + 2.
    05  COL 1          VALUE "SPORT:".
    05  COL + 2        PIC X(8)  SOURCE SPORT.
    05  COL + 2        VALUE "(CONT.)"  ABSENT AFTER NEW SPORT.
  03  LINE            VALUE "=====".
```

### 1.5.7 MULTIPLE PAGE Groups

If you have a large vertical table to print, perhaps a summary with one line for each value encountered, you may be concerned that it will not always fit on one page. Perhaps there are **usually** less than 60 items but you have to allow for anything up to 1000 items! To handle this, code the clause **MULTIPLE PAGE** on your *01*-level. Report writer will then automatically do a page advance whenever the page is full (printing PAGE FOOTING and PAGE HEADING as usual). Thus your code would be:

```
01  SUMMARY-PAGES  TYPE DETAIL  MULTIPLE PAGE.
    03  LINE  OCCURS 0 TO 1000 DEPENDING ON NO-OF-ITEMS.
      ... etc.
```

This feature also handles more complex layouts, perhaps a multi-page personnel profile.

### 1.5.8 Line WRAP

You may sometimes define a number of relative COLUMN entries in one line and wonder whether they will all fit in the same line. If not, report writer will automatically *wrap* your data round onto a continuation line, but only if you code a **WRAP** clause. You can specify the last column before the wrap, the starting column for the continuation and the line advance required. As an example, you may have a series of possible error messages:

```
03  LINE + 3  WITH WRAP AFTER COL 120 TO COL 82 STEP 2.
    05  COL 1        PIC X(80)    SOURCE INPUT-RECORD.
    05  COL + 2     "ACCOUNT NUMBER INVALID"  PRESENT WHEN ...
    05  COL + 2     "AMOUNT NOT NUMERIC"      PRESENT WHEN ...
    05  COL + 2     "DATES IN REVERSE ORDER"  PRESENT WHEN ...
etc.
```

### 1.5.9 FUNCTIONs

The **FUNCTION** clause is used when you need to produce a specially formatted or converted report field that cannot be produced by *SOURCE*, *SUM*, or *VALUE* . Each FUNCTION corresponds to a pre-written routine that is either a *built-in* part of the report writer software or written by a person at your location. Examples of built-in FUNCTIONs are:

**DATE** This outputs today's date, or any given date, in the order: Day-Month-Year.

**MDATE** This produces the same output as DATE, but in the order: Month-Day-Year.

**TIME** This gives the current time.

Here is an example of how to use MDATE. Let's suppose that today is May 7th, 1999. Then if you write:

| | |
|---|---|
| `PIC 99/99/99 FUNCTION MDATE`, you will obtain: | `05/07/99` |
| `PIC <X(9)B<99,B9(4) FUNCTION MDATE`, you will obtain: | `MAY 7, 1999` |

Information about developing your own functions will be found later (see 5.2 *Developing User-Written Functions*).

### 1.5.10 Special Print Attributes (Styles)

Nowadays all large system printers and smaller-scale printers and terminals have the ability to produce *special effects* which we hardly ever make any use of in COBOL applications. The *STYLE clause* enables you to make full use of any special effects that are available without affecting your program's portability. Supposing that you wish to *highlight* any "negative profits". Write:

```
05  COL 21   PIC -(8)9  SOURCE PROFIT
         STYLE IS HIGHLIGHT WHEN PROFIT < 0.
```

You will now not need to change your program when moving between, say, a personal system, a mainframe with a laser printer, and a mainframe with an old impact printer, except possibly to change the *TYPE* clause in the *SELECT...ASSIGN* if it is not preset as the default. Also, the STYLE clause has no effect on the COLUMN clauses or any other part of your source program.

### 1.5.11 Independent Report File Handlers

Normally, your report's outputs are directed to a standard print file, as though you had written the program in elementary COBOL using *WRITE AFTER ADVANCING...* statements. An *Independent Report File Handler* is a pre-written routine to which all the output for a report file is directed. It may manipulate and output the data in any way the designer chooses. Your program can be made to invoke the file handler each time it has a line of report data, instead of implicitly executing a WRITE...AFTER ADVANCING. Each file handler is identified by a unique "mnemonic-name" of up to four characters. You cause your report program to use a file handler by coding your SELECT clause for the report file in the following way:

```
SELECT print-file ASSIGN TO assignment-name
       MODE IS mnemonic-name.
```

The file handler may require you to define a CODE clause in your RD statement. This clause is used to pass additional information to the file handler. Apart from this, no other change need be made to your program.

### 1.5.12 Multiple Reports

Your program may need to produce several different physical reports. Of course, you may define as many report files as you like, and each may be associated with as many Report Descriptions as you wish. But what if several of the reports have a **similar appearance**? You will not want to duplicate the code for all the Report Group Descriptions. Instead, you may define the report just once and effectively assign it to several files (although only one FD entry is coded). Just add the following clause to your SELECT clause:

```
DUPLICATED integer TIMES
```

with the *integer* set to the maximum number of distinct reports you need.

The DUPLICATED clause causes the special register *REPORT-NUMBER* to be set up. You can MOVE any value into REPORT-NUMBER from 1 to your maximum number. This causes report writer to *channel* subsequent output to the corresponding report file. Each report is logically separate. Of course, the **contents** of each report are different because your program is writing to only one of the set at any given time. The layouts need not all be identical, since you are quite free to vary them conditionally in the usual way. (For example, *REPORT-NUMBER* could be used as a subscript or within the condition of a *PRESENT WHEN* clause.)

Only one *FD* entry is required for all the physical files associated with the multiple report. Similarly, only one *OPEN* and one *CLOSE* are required to open and close all its files. More details will be found later (see 5.1 *Multiple Reports*).

### 1.5.13 Using the Page Buffer

Some layouts are so irregular that you may wish that you could build up the page in any order like a news-sheet editor. The *Page Buffer* facility enables you to do this. Just add to your SELECT clause:

```
WITH PAGE BUFFER
```

Now you can tackle a layout such as the following:

```
            NEW MEMBER DETAILS
NAME AND ADDRESS                SPORTS PLAYED

ANDREW ANALYST                  TENNIS
21 MITCHAM ROAD                 SQUASH
PUTNEY                          SWIMMING
LONDON SW6
```

```
01  NAME-ADDRESS-GROUP
TYPE DE.
```

```
01  SPORTS-GROUP  TYPE DE.
    ...
```

The report groups in boxes have been defined separately. Normally you would not be able to place them alongside each other. (The *REPEATED* clause is **not** appropriate as *NAME-ADDRESS-GROUP* and *SPORTS-GROUP* are instances of **different** groups, not instances of the same group.) By using the Page Buffer you may now write in the PROCEDURE DIVISION of your program:

```
SET PAGE STATUS TO HOLD
      GENERATE NAME-ADDRESS-GROUP
      SET LINE TO FIRST DETAIL
      SET PAGE STATUS TO RELEASE
      GENERATE SPORTS-GROUP
```

You may store the groups on the page in any order. It is also possible to change the left/right positioning of groups by means of the *SET COLUMN* statement. There are several other variants of *SET PAGE* and *SET LINE* (see 4.4 *Report Writer SET statements*).

## 1.6 Further Study

The remainder of this volume cover the topics of this Tutorial in more detail. Since each part is organized in alphabetical sequence, it is not advisable to read them straight through, and the following order of topics is suggested for a first reading:

Part 2:

Report Files, REPORT SECTION and RD;
PAGE LIMIT clause;
CONTROL clause.

The rest of this part may be left to a second reading.

Part 3:

Introducing Report Groups;
TYPE clause;
LINE clause;
COLUMN clause;
SOURCE clause, VALUE clause;
OCCURS clause, VARYING clause;
SUM clause;
PRESENT WHEN clause, PRESENT AFTER clause;
FUNCTION clause.

The rest of this part may be left to a second reading.

Part 4:

Report Writer Verbs: Overview;

INITIATE statement, GENERATE statement, TERMINATE statement, **excluding** at first reading the "GENERATE Processing Cycle" and "TERMINATE Processing Cycle".

The rest of this part may be left to a second reading.

Part 5 may also be left to a second reading.

# 2

# Report Files and RD Entries

This part contains full information about the COBOL Report Writer elements that can appear in the *ENVIRONMENT DIVISION* and *FILE SECTION* of your program, and then, in alphabetic order, the clauses that may be used in an *RD* entry.

If you are migrating older programs written using OS/VS or DOS/VS COBOL's built-in Report Writer, you should refer to the *Compatibility* paragraph at the end of each section, which points out any new Report Writer features that these compilers do not accept.

Although most of the examples that follow use UPPER-CASE text, you may also use lower-case characters in any of the keywords and operands.

## 2.1 Report Files and RD: Keyword Table

The following table lists the major keywords relevant to COBOL Report Writer that may appear in the *ENVIRONMENT DIVISION*, *FILE SECTION*, and the *RD* entry, with a summary of their purposes. The third and fourth columns tell you whether or not the item is provided by IBM's OS/VS and DOS/VS COBOL and, if so, whether *COBOL Report Writer extends the facilities*.

If you wish to remain compatible with OS/VS or DOS/VS COBOL, you should avoid the new keywords and the extensions to the old ones. You will find additional information on this subject in the *compatibility* paragraph at the end of each section.

## Report Files and RD: Keyword Table

| Keyword | Purpose | OS/VS DOS/VS COBOL? | Extensions to OS/VS and DOS/VS COBOL |
|---|---|---|---|
| **SELECT** (in ENVIRONMENT DIVISION) | Associates file with external medium | yes | ▫ **MODE** clause to direct output to Independent Report File Handler<br>▫ **DUPLICATED** clause for multiple report files<br>▫ **WITH PAGE BUFFER** for holding page contents before printing<br>▫ **WITH RANDOM PAGE** for writing to a cursor-controlled device<br>▫ **FIRST PAGE NO ADVANCING** to suppress initial page advance<br>▫ **TYPE** clause to select type of output device |
| **REPORT IS** / **REPORTS ARE** (in FD) | Associates report with file | yes | ▫ **ALL** phrase |
| **STYLE** (in FD) | Invokes a special printer facility for the file or report | no | |
| **LINE LIMIT** | Gives maximum report line width | no | |
| **GLOBAL** | Makes report available to contained programs | no | |
| **PAGE LIMIT** | Allocates regions of page for different group TYPEs | yes | ▫ **DE**=DETAIL<br>▫ **FIRST BODY GROUP**=FIRST DETAIL<br>▫ **LAST DE OR CH**=LAST DETAIL<br>▫ **LAST CF**=**LAST BODY GROUP**<br>=FOOTING<br>▫ phrases are now positionally independent sub-clauses<br>▫ LIMIT, LINE(S) not required<br>▫ FIRST DETAIL/LAST DETAIL not required even when PAGE HEADING/FOOTING coded |
| **CONTROL** | Specifies field(s) whose change of contents triggers a control break | yes | ▫ **REPORT**=FINAL<br>▫ controls may overlap |

| | | | |
|---|---|---|---|
| **CODE** | Attaches non-print data to report records | yes | ▫ value may be of any length<br>▫ **CODE IS identifier** format<br>▫ **CODE IS literal** format |
| **OVERFLOW** | Specifies action to be taken when expression or SUM overflows | no | |
| **ALLOW SOURCE SUM CORR** | Selects ANS-85 or ANS-68 rules for SUMming | no | |

## 2.2 Report Files

COBOL Report Writer produces output records and writes them **automatically** to COBOL report files when your program executes a GENERATE statement (see 4.2) or TERMINATE statement (see 4.6). The report files are described very much like any other output sequential files. Each must have a *SELECT...ASSIGN* clause in the *ENVIRONMENT DIVISION*, and an *FD* in the *FILE SECTION*. They are accessed in the PROCEDURE DIVISION through the *OPEN* and *CLOSE* statements.

If the output is to be written to a special medium, or the program is to run in any special environment, or special treatment is to be given to the report data, the *MODE* clause is used. This directs report writer to use a specific *file handler* instead of writing output records in the standard way.

Your program may contain **any number** of report files and, if required, **any number** of other files. As usual, you may code your SELECT...ASSIGN clauses and your FD entries in any order.

### 2.2.1

**a. SELECT ...ASSIGN clause :**

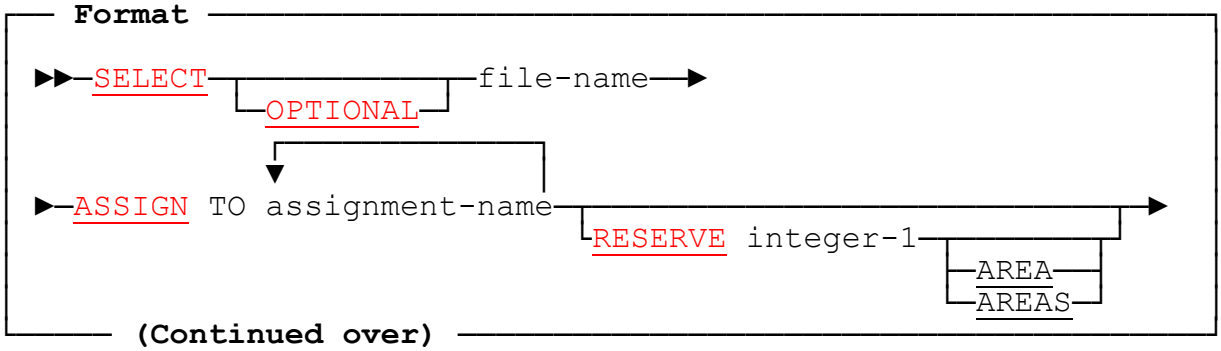

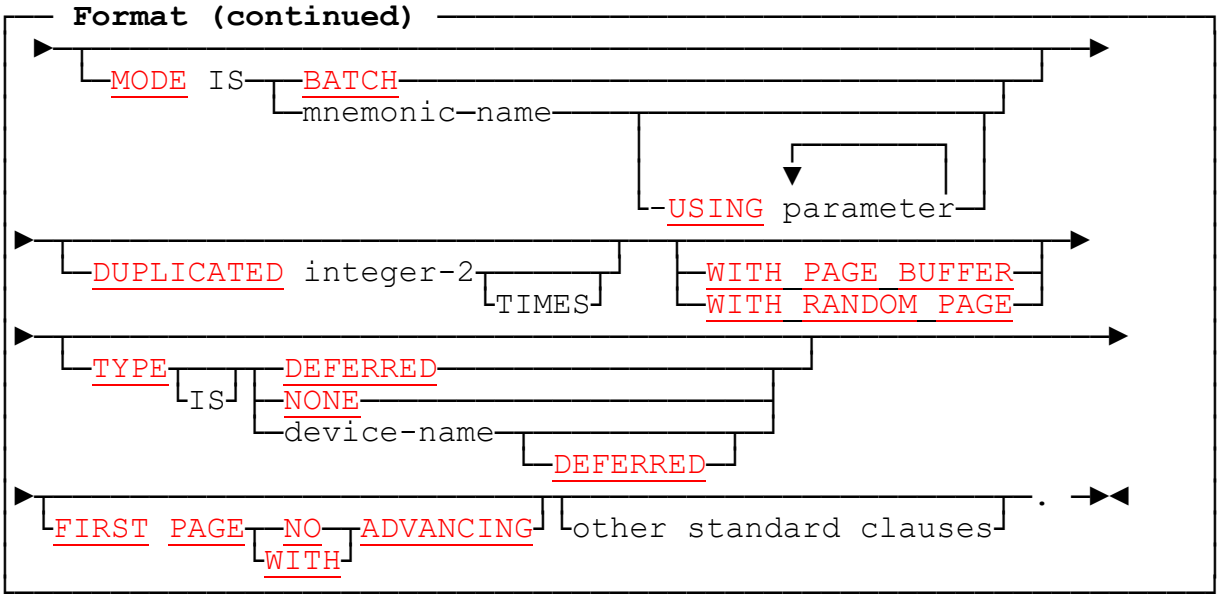
Format (continued)
MODE IS
BATCH
mnemonic-name
USING parameter
DUPLICATED integer-2
TIMES
WITH PAGE BUFFER
WITH RANDOM PAGE
TYPE
IS
DEFERRED
NONE
device-name
DEFERRED
FIRST PAGE
NO
WITH
ADVANCING
other standard clauses
.

**b. FD entry :**

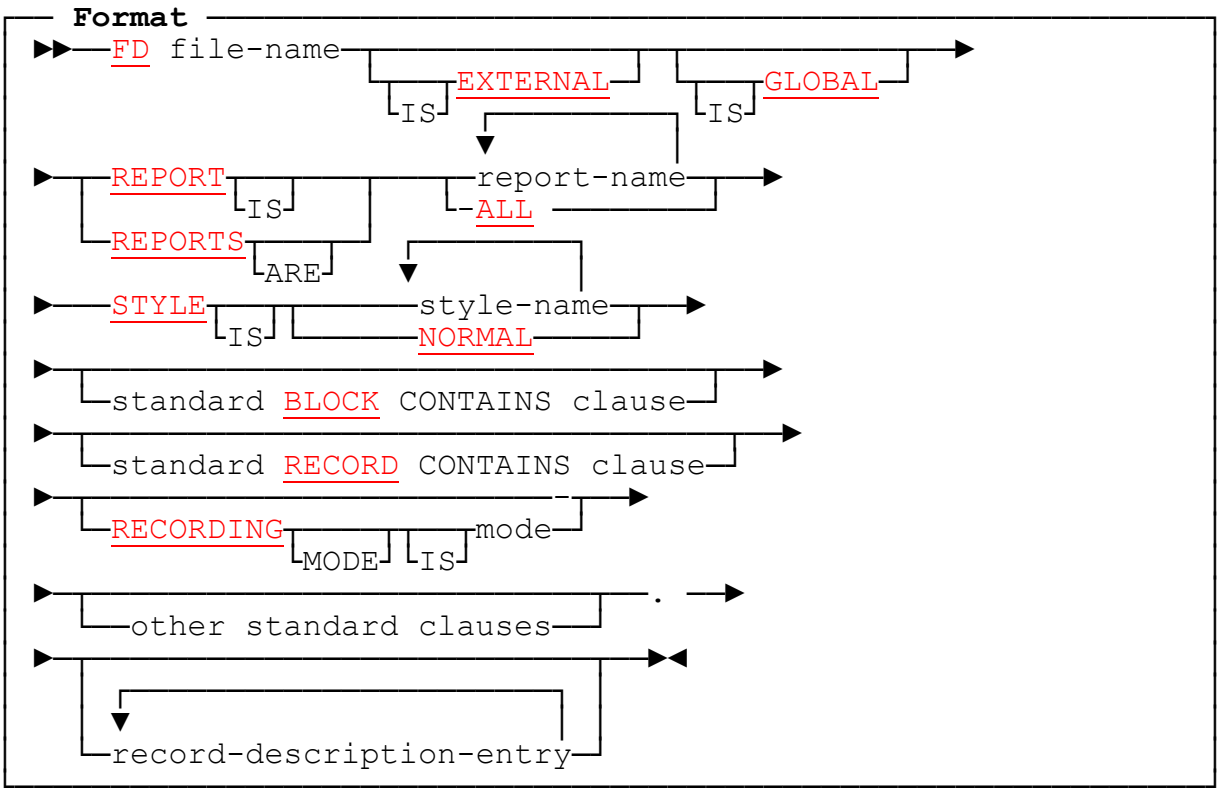
Format
FD file-name
IS
EXTERNAL
GLOBAL
IS
REPORT
IS
report-name
ALL
REPORTS
ARE
STYLE
IS
style-name
NORMAL
standard BLOCK CONTAINS clause
standard RECORD CONTAINS clause
RECORDING
MODE
IS
mode
other standard clauses
.
record-description-entry

### 2.2.2 Select and FD: Coding Rules

1. You may code any other clauses after SELECT and any other clauses **except** *LINAGE* in the FD entry that may be appropriate for an output sequential file. In particular, a *FILE STATUS* clause may be used to return the status of your report file. The order of clauses is not significant.

2. Each *report-name* is a name of up to 30 characters, formed according to the usual rules for COBOL names. You might choose names that describes the output produced by the report, such as REPORTS ARE *MONTHLY-SALES, END-OF-YEAR-TOTALS*.

3. Each *report-name* must be the same as the report-name following an *RD* in your REPORT SECTION. A report-name may be *DBCS*. A report-name may appear **only once** in an FD entry. However, it may appear in more than one FD provided that any *INITIATE* for the report-name has the *UPON file-name* phrase (see 4.3 *INITIATE statement*) and provided that all the corresponding *SELECT* statements for these files differ only in their file-name, *ASSIGN* clause and *MODE* clause (if present).

4. If every report is to be written to the same file, you may write **REPORTS ARE ALL**. *ALL* must be the only operand and *REPORTS ARE ALL* must be the only REPORT(S) clause in the program.

5. A *RECORD CONTAINS* clause, or a *BLOCK CONTAINS* clause with the *CHARACTERS* option, is **required** if the *identifier* form of the CODE clause is used in any RD associated with the file. In all other cases, it is **optional**.

6. You should not normally specify a *record-description-entry* after the FD entry, because report writer relieves you of the need to code any *WRITE* statements for the report files. Your program **may** WRITE records to a report file independently of report writer, provided that there is no MODE clause in the corresponding SELECT and no CODE clause in the RD, and in this case you will of course need to specify at least one *01*-level record description following the FD entry.

   An explicit *WRITE* to the report file may be necessary in rare instances, such as when a *downstream* program will read your report file and it requires a header or trailer which must not have a carriage control character in its first byte. (Otherwise, a REPORT HEADING or REPORT FOOTING could be used for this purpose: even if there are non-DISPLAY fields to be written, they could be handled using a SOURCE referencing them as a large group field.) An *Independent Report File Handler* may also be used to *manipulate* the output for this purpose (see 5.3 *Independent Report File Handlers*).

7. If you **do** code a record description after the FD entry, and you wish to obtain fixed-length records, you should code a *RECORD CONTAINS* clause, even if you have also specified *RECORDING MODE IS F*. The *integer* of the RECORD CONTAINS clause should agree with the size of your record and must allow for the *carriage control character* if the *NOADV* option is in effect.

8. The *MODE* clause is used to indicate that each line of the report is to be passed to an *Independent Report File Handler*, instead of being written directly to a print file. The *mnemonic-name* consists of up to **four** alphanumeric characters . No check is made on the availability of the file handler until execution time. The

file handler may be either the basic file handler *PRNT*, a *user-written*, or a *built-in* file handler. File handlers extend the uses of report writer beyond output to "*batch*" files. They have two chief uses: (a) they allow the output to be sent to **any** kind of new physical device **without changes to the program** and (b) they allow a "*back-end*" software routine to perform any additional processing on the output. File handlers are described in a later section (see 5.3 *Independent Report File Handlers*) where the supplied file handlers are also listed.

9. The *DUPLICATED*, *WITH RANDOM PAGE*, and *WITH PAGE BUFFER* features cannot be implemented at run time by direct output and require a file handler to be present (although their processing is handled entirely by the run time system and not by the file handler itself). So if any of these clauses is present, but no *MODE* clause has been coded, the precompiler will assume an implicit *MODE PRNT* clause to be present. The same assumption is made if any report associated with the file has a CODE clause (except when all such reports have a CODE clause and they are all of the same length), see 2.5 *CODE clause*.

10. If the *MODE* clause is present, or is assumed implicitly for the reasons given in the preceding paragraph, the following restrictions apply:

    a. **No** record descriptions may follow the FD entry for that file, as you cannot *WRITE* directly to a file that is processed by an Independent Report File Handler, see 5.3 *Independent Report File Handlers*.

    b. The *EXTERNAL* and *GLOBAL* attributes have no effect. (Note that a report may still be *GLOBAL*, even though its corresponding file is not. Use of the *MODL* file handler also allows a report file to be treated as global (see 5.3.2 *Supplied File Handlers*).

    c. The clauses *RESERVE integer-1 AREA(S)*, *PADDING CHARACTER*, *RECORD DELIMITER*, and *PASSWORD* of the SELECT...ASSIGN clause and the clauses *BLOCK CONTAINS integer RECORDS*, *LABEL RECORD(S) IS/ARE data-name*, *RECORD IS VARYING...*, *CODE-SET*, and *VALUE OF...* of the FD are not processed by the file handler and are treated as documentary only.

    d. **No** *USE AFTER STANDARD ERROR/EXCEPTION PROCEDURE* Declarative section should be coded for the file.

    e. The *CANCEL* and *STOP RUN* statements cannot be relied on to *CLOSE* files implicitly, as allowed under ANS 85 for regular files.

11. The *device-name* of the *TYPE* clause gives the make and model of the output device, or some other symbolic name. The TYPE clause enables the precompiler, or the run time system, to select the correct sequence of control characters to produce the desired special effect on the target device. (See 3.22 *STYLE clause*.) Apart from the reserved name *NONE* (meaning that no particular device is to be assumed) and *TEST* (a specially reserved name), there is a set of special character values associated with each device-name and each of the special effects available from the device. The physical values of these characters and the method by which they are inserted into the output is

highly machine- and device-dependent, but quite transparent to the program. Device-names are described in *Installation and Operation*.

*DEFERRED* means that any styles used are to be interpreted at **run time**, rather than **stored explicitly** when the program is precompiled. This enables the same program to operate with a number of different output devices without re-compilation.

If *DEFERRED* alone is given, the program will determine the target device at run time from the operating environment. It is then assumed that there may be an implicit style at the FD and the RD levels at run time (unless *STYLE NONE* is specified) and provision is made for them.

*DEFERRED* is also implied if *PAGE BUFFER* is coded, since the page buffer routine must know which characters are printable and which are control characters. DEFERRED may also be forced by any particular STYLE if the implementation decides that the routines required to effect it cannot be included at precompilation time.

If *TYPE* is not coded, the precompiler will assume a *default device-name*, chosen by the user at customization time, which may be absent, i.e. NONE.

If the device-name is *NONE*, any STYLE clause applying to this file, other than *NORMAL*, will be rejected, whether it is in the corresponding FD, any report assigned to the file, or in a report group description.

### 2.2.3 FILE-CONTROL and FD: Operation

1. If you specify **more** than one report-name in the same ***REPORTS ARE*** clause, you will be able to generate report data either consecutively or concurrently for the same file. (***REPORT IS*** and ***REPORTS ARE*** are interchangeable, however many report-names follow.) Tips on creating more than one report concurrently will be found later (see 5.1.4 *Concurrent Reports*).

2. The *USING* phrase indicates that the file handler is to be passed the parameters you specify in **addition** to the parameters normally passed automatically to the file handler on each call. The additional parameters will be **first** in the list of parameters passed. Only *user-written* file handlers may employ additional parameters, and their associated documentation should specify the exact number and size of the additional parameters required because, unless these are correct, unpredictable results may occur. Each parameter may be an *identifier* or *literal* or any other item that would normally be allowed in the *USING* phrase of a *CALL* statement, including their additional keywords such as *LENGTH OF*, *ADDRESS OF*, *BY CONTENT*, or *BY REFERENCE*.

3. The *DUPLICATED* clause indicates that *integer-2* copies of the report writer *Report Control Areas* are to be created. For example, if you code *DUPLICATED 4 TIMES*, **four** copies of *PAGE-COUNTER*, *LINE-COUNTER*, control-break areas, total fields, and other internal registers or locations used by report writer will be set up under that *report-name*. Each copy controls a totally separate report,

passed to a different physical file (although only one *FD* entry is needed). This enables you to produce several separate reports that **share an identical or similar layout** without having to re-code several similar Report Descriptions.

4. The *WITH PAGE BUFFER* clause indicates that the *Page Buffer facility* is to be available to the file handler. This enables you to use the *SET PAGE TO HOLD / RELEASE*, *SET LINE*, and *SET COLUMN* statements (see 4.4 *Report Writer SET statements* *Report Writer SET Statements*) to build up your page in random fashion. A full explanation of Independent Report File Handlers and all related clauses is given in a later part (see 5.3 *Independent Report File Handlers*).

5. The *WITH RANDOM PAGE* clause indicates that the *SET LINE* and *SET COLUMN* statements may be used (see 4.4 *Report Writer SET statements*) to build up your page in random fashion. This clause is used when the output device is one which outputs data **page by page** rather than line by line (such as a visual display, or laser or page printer) and can change its *"current position"* to anywhere on the page. It is similar to *WITH PAGE BUFFER*, except that the *buffer* is in the device itself rather than in the program.

6. If you require normal output to a standard file, you may write *MODE IS BATCH*. This prevents any use of a file handler. *MODE IS BATCH* cannot be used if a *DUPLICATED* or *WITH PAGE BUFFER* clause has been coded.

7. If you do **not** code a *RECORD CONTAINS* clause or a *BLOCK CONTAINS* clause with the *CHARACTERS* option, report writer will calculate the *logical record length* for the report file from the longest actual line found in all the *Report Descriptions* associated with the file (rounded up to a multiple of 4). The length of the *CODE* field, where appropriate, and *carriage control character* are also added.

8. If you **do** code a *RECORD CONTAINS* clause (or, in its absence, a BLOCK CONTAINS clause with the CHARACTERS option), the *integer* specified will be used as the *logical record length* for the report file. The same *integer*, after subtracting the length of the carriage control character (if the *NOADV* option is in effect) and the *CODE* field, if appropriate, is also used to calculate a provisional value for the maximum line width for any report associated with the file (up to the default maximum established on customization), in case you omit the *LINE LIMIT* clause in an RD entry.

9. If you write *RECORDING MODE IS V* for a standard batch file (one **not** produced by a file handler), Report Writer will write *variable-length* records to your report file, truncating them, where possible, immediately after the last field in the line. This means that in most reports records will be considerably shorter, even after allowing for the additional record descriptor bytes that precede each record. If you also coded an optional *RECORD CONTAINS* clause with the format *RECORD CONTAINS lower-integer TO higher-integer CHARACTERS*, the *lower-integer* is used as a minimum length for all report records written to the file. Since QSAM normally requires at least **four** bytes per record (plus the carriage control byte), you should write *RECORD CONTAINS* **4** *TO maximum-integer CHARACTERS*, or, if NOADV is in effect, then *RECORD CONTAINS* **5** *TO maximum-integer CHARACTERS*.

10. If you specify a *RECORDING MODE* clause for a file that uses an Independent Report File Handler, the recording mode you specify will be placed in report

writer's File Control Area for the report file, and the file handler may choose whether to act on it or to ignore it. The records passed to a file handler are always *variable-length*, irrespective of the *RECORDING MODE*. The file handler may process them in this form or output them as fixed-length records. The built-in *PRNT* file handler ignores the RECORDING MODE and uses the record format specified, or implied, at run time.

11. You may specify *EXTERNAL* or *GLOBAL* for a file that has a REPORT(S) clause. It is **not** necessary for a report file to be GLOBAL in order for it to have a GLOBAL report associated with it.

12. If you write *FIRST PAGE NO ADVANCING*, the usual form feed is **not** issued at the start of the **first** page after execution of the *OPEN* for the file. Instead, the program assumes that the paper is already positioned on line 1 of the page. This feature is useful for printing on pre-numbered forms when you do not want the first page to be wasted. (You may also eliminate **all** form feeds using the *MODE NOPF* (see 5.3.2 *Supplied File Handlers*).) FIRST PAGE **WITH** ADVANCING (the normal default) is provided for symmetry.

### 2.2.4 Compatibility

The MODE, DUPLICATED, WITH PAGE BUFFER, FIRST PAGE NO ADVANCING and STYLE clauses, and the concept of an *Independent Report File Handler* are unique to new Report Writer.

## 2.3 REPORT SECTION and RD

Each of your Report Descriptions is placed in the *REPORT SECTION*. The ANS standards, OS/VS COBOL, and DOS/VS COBOL all require this to be the last SECTION of the DATA DIVISION, positioned immediately before *PROCEDURE DIVISION*. However, the precompiler allows REPORT SECTION to appear **anywhere** in the DATA DIVISION after FILE SECTION.

Just as the FILE SECTION consists of a series of *FD* entries, each with record descriptions headed by an *01*-level entry to follow, so the REPORT SECTION consists of *RD* entries, each followed by *Report Group Descriptions* headed by an 01-level entry.

Your program may produce **any number** of reports, each with its own Report Description. Each Report Description consists of an RD entry followed by **any number** of Report Group Descriptions (although there are restrictions according to *TYPE*; see 3.24 *TYPE clause*). The order in which they are coded is immaterial. If several of the reports have strong similarities, you should define the report only once and make use of the *DUPLICATED* clause.

### 2.3.1

**Format**

**where** *report-description-entry* is defined as follows:

**Format**

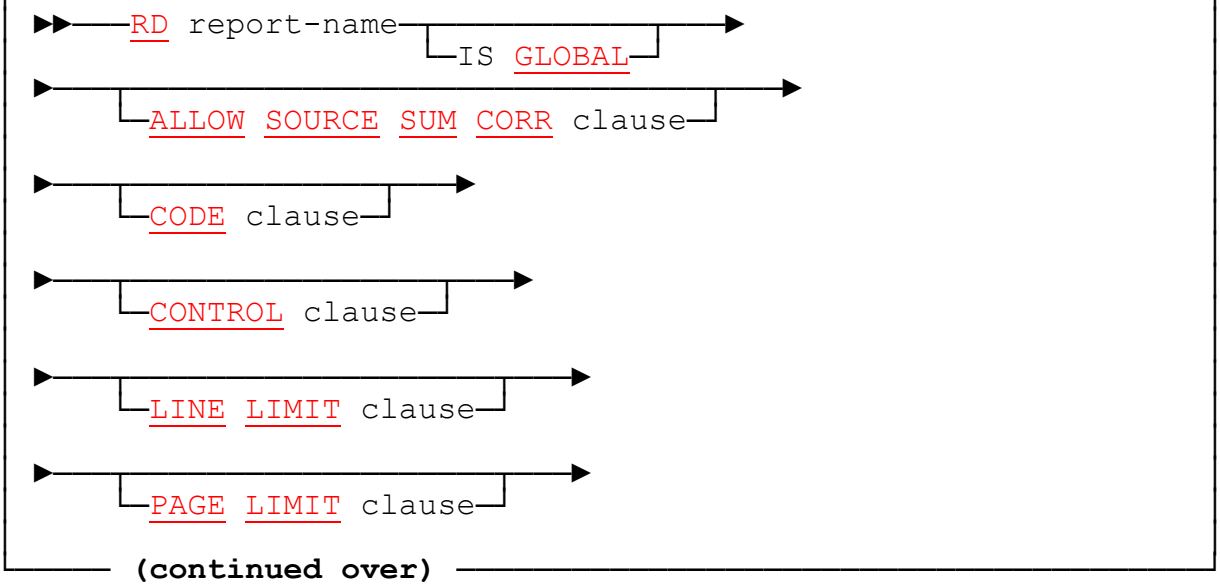


**(continued over)**

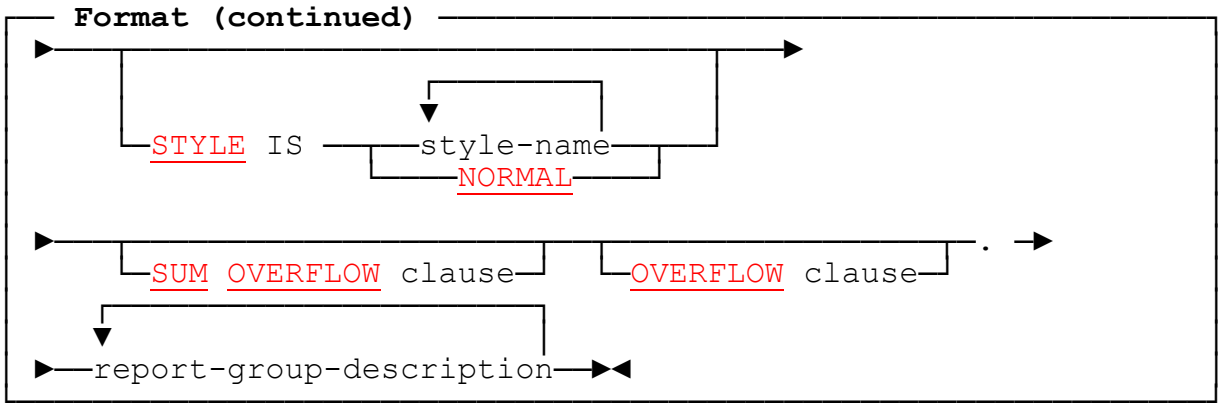


### 2.3.2 REPORT SECTION and RD: Coding Rules

1. All other DATA DIVISION sections, if present, should precede *REPORT SECTION*.

2. Each *report-name* must be unique and must be the same as one of the report-names specified in the *REPORT* clause of one or more *FD* entries. (If a report-name appears in more than one FD, the *UPON* phrase of INITIATE is required, see 4.3 *INITIATE statement*.) This correspondence is used to determine where the output is to be written. Each report-name introduced in the FD must match a report-name of an RD.

3. The clauses of the RD may be written in **any order**; the order is not significant.

4. Each RD entry is followed by at least one *Report Group Description*. These define all the report groups (sets of one or more report lines) that may be produced in the report. They are fully described in the next part (see 3.24 *TYPE clause*).

5. If *GLOBAL* is specified, the report is available to any program **contained** in the current program, in the following senses:

   a. An *INITIATE*, *GENERATE*, or *TERMINATE* for the GLOBAL report-name may be issued from within a contained program, provided that the contained program itself does not have a locally-defined report of the same name. The contained program need not contain a REPORT SECTION.

   b. A *GENERATE* for any of the DETAIL report groups of the GLOBAL report may be issued from within a contained program, provided that the contained program itself does not have a locally-defined report and DETAIL group with the same names. If a GLOBAL report and a locally-defined report have different names but share DETAIL groups with the same name, these may be distinguished as usual by means of the *IN/OF report-name* qualifier.

   c. The *special registers PAGE-COUNTER*, *LINE-COUNTER*, *LINE-LIMIT*, and *CODE-VALUE* of the GLOBAL report, together with any *sum-counters*, may be accessed as GLOBAL items. Other report fields are **not** globally accessible.

The *CONTROL* and *SOURCE* fields, or any other data items used during the processing of the GLOBAL report, are those that are accessible to the containing - **not** the contained - program. Thus, SOURCE items must normally also be *GLOBAL* if you wish to set up values in them and print them from within a contained program.

If a contained program contains a GLOBAL report with an identical report-name, this will override the scope of original GLOBAL report until the end of the contained program. Similarly, a DETAIL group in a GLOBAL report of a contained program may override an identically-named one in the containing program.

The program in which the GLOBAL report is defined must receive control at least once before the report can be accessed, even though it need not itself contain any procedural statements referring to the GLOBAL report.

6. The *STYLE* clause causes one or more *styles* to take effect for the report as a whole. Usually this means that a certain control sequence will be sent to the printer just after the *INITIATE* is executed and another control sequence just before the *TERMINATE* is executed. If no STYLE clause is coded, an *implicit* style for the report may take effect, if this has been defined for the output device. *STYLE NORMAL* ensures that no style takes effect at the report level. Full details are given in the next part (see 3.22 *STYLE clause*).

The Formats and Rules for the other clauses in the RD are given in the sections that follow.

### 2.3.3 Compatibility

1. The following features are provided by new Report Writer only:

   - The GLOBAL phrase, and access to GLOBAL reports,
   - Use in ANS-85 contained or batched programs,
   - The LINE LIMIT clause,
   - The ALLOW clause,
   - The OVERFLOW and SUM OVERFLOW clauses,
   - The STYLE clause.

2. New Report Writer allows several FD's to be associated with a given report-name, provided that the UPON phrase is used with an INITIATE for the report-name. It does not write to more than one file simultaneously. If you wish to continue to write to two files simultaneously, this may be achieved by means of a *file handler* that performs a WRITE to each file. See 5.1 *Multiple Reports*.

See the end of each section for compatibility notes on the other clauses.

# 2.4 ALLOW clause

This clause enables you to select whether the *ANS-68* or the *ANS-85* standard rules should be used for the formation of totals.

## 2.4.1

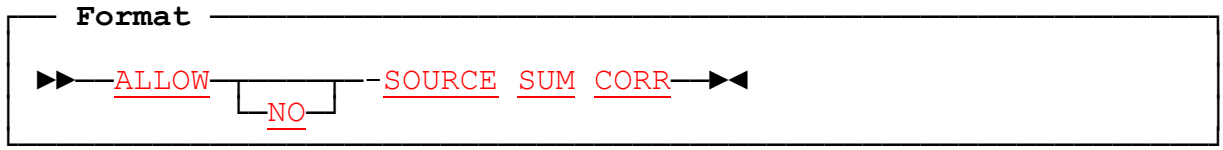


## 2.4.2 ALLOW Clause: Coding Rules

1. The COBOL Report Writer software, as supplied, assumes:

   **ALLOW SOURCE NO SUM CORR**

   because of the setting of the *OSVS* precompiler option . This default may be altered permanently by customization, or temporarily by changing the setting of the OSVS option in the JCL. You will need to code this clause only if you need to override the normal default, or if your program is to be *portable* and it is important to document which standard you are assuming.

## 2.4.3 ALLOW Clause: Operation

1. *ALLOW SOURCE SUM CORR* causes *SOURCE SUM correlation* to take effect throughout the report. The correlation between SOURCE items in a DETAIL and SUM clauses in a CONTROL FOOTING group is the **main distinguishing feature** of the ANS-68 standard. It is the **only** important case where the **same** code may give **different** results under the '68 and the '85 standards. OS/VS and DOS/VS COBOL's built-in Report Writer uses the ANS-68 standard, and this is why the supplied version has the option **OSVS** set **on**, implying SOURCE SUM correlation. It will be important for you to understand the effect of SOURCE SUM correlation if your report has:

   - more than one DETAIL group, and
   - a SUM clause referring to a data item that is defined in a section of your DATA DIVISION (**other than** the REPORT SECTION).

   For full details, see 3.23 *SUM clause*.

2. If you code the word *NO* the effect is reversed.

## 2.4.4 Compatibility

The ALLOW clause is provided by new Report Writer only. OS/VS and DOS/VS COBOL always act as though *ALLOW SOURCE SUM CORR* were assumed.

## 2.5 CODE clause

This clause can be used to **prefix non-printable fields** to the report records. Such information is typically of use to de-spooling software and special device handlers.

### 2.5.1

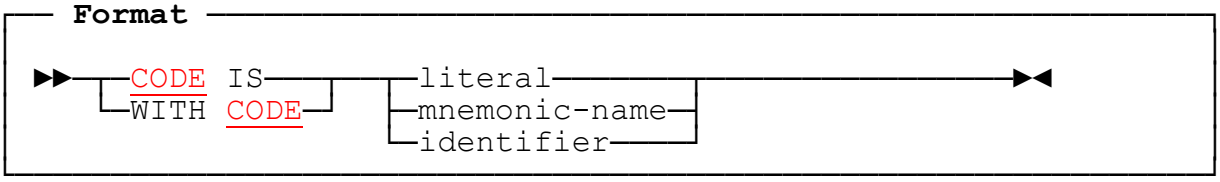


### 2.5.2 CODE Clause: Coding Rules

1. The forms *CODE IS* and *WITH CODE* are synonymous.

2. The CODE clause is **not** permitted if the associated *FD* entry is followed by a record description entry. This is because it would be illogical to WRITE independently to the file if there is also a CODE. See 2.2.2 *Select and FD: Coding Rules* and the rest of this section for further details.

3. The *literal*, if coded, must be a non-numeric literal.

4. If an *identifier* operand is used, it must represent a group field or a non-edited alphanumeric elementary field. The associated *FD* entry for the file must then have either a *BLOCK CONTAINS* clause with the *CHARACTERS* option or a *RECORD CONTAINS* clause, or both.

5. If a *mnemonic-name* operand is coded, there must be an entry in *SPECIAL-NAMES* of the form:

   **literal IS mnemonic-name**

6. where *literal* is non-numeric. The value of *literal* is then used as the CODE value. If you require compatibility with ANS-68 report writer, **one** character is the norm. For ANS-85 compatibility, you should code a two-character literal.

7. If your report file description has a *RECORD* or *BLOCK CONTAINS integer CHARACTERS* clause and there is no *MODE* clause after SELECT, the size of the CODE, plus the maximum line width, must not be greater than the number of CHARACTERS specified.

8. Not all RD entries associated with the same report file need have a CODE clause and all the CODE clauses need not specify an operand of the same length. However, if the report file does not use a user-written *file-handler* that might ascribe some meaning to different lengths of CODE, it may be impossible to recognize the CODE at the front of each records and decide how long it is.

### 2.5.3 CODE Clause: Operation

1. The presence of a CODE clause implicitly establishes the *special register CODE-VALUE* in the Report Control Area. You may alter the contents of CODE-VALUE at any time. If there are several CODE clauses in different RDs within your program, you **must** qualify CODE-VALUE by the *report-name*.

2. If you do **not** specify a *MODE* clause after the *SELECT* for the corresponding report file, the value of the CODE is **prefixed** to **every** record written by report writer to the report file. The CODE is placed immediately **before** the *carriage control character*:

| | | |
|---|---|---|
| CODE | ccc | print data ... |

   If the length of the CODE is **not** the same for every report being written to the file, or if some of the reports have no CODE, then a *MODE PRNT* clause is assumed in default, causing the built-in PRNT file handler to be invoked.

3. If you **do** specify a MODE clause after the SELECT, CODE-VALUE will be passed to the *Independent Report File Handler* in the Report Control Area. Built-in file-handlers (PRNT, MODL, NOPF) treat the CODE in the authodox way just described, but a user-written file handler may interpret CODE-VALUE in **any desired way**. Hence, your own user-written file handler may use the CODE clause for the passing of any additional information that is required by the file handler but does not necessarily appear in the report line itself. See 5.3 *Independent Report File Handlers* for more information.

4. If a *literal* or *mnemonic-name* is used, the size of CODE-VALUE is the length of *literal*, and CODE-VALUE is preset to the value of *literal*.

5. If an *identifier* is used, the length of CODE-VALUE is the (maximum) record length given in the *RECORD CONTAINS* clause, minus the *LINE LIMIT*. The current value of *identifier* is stored in CODE-VALUE at the start of the processing for each DETAIL or CONTROL HEADING for the report. This does not occur if the current group is a CONTROL FOOTING, so as to ensure that only *pre-control-break* values will be used. In the following example (assuming *ADV* is in effect) the size of CODE-VALUE is 140 minus 132 = **8** bytes, and the field *WC-ACCOUNT-REF* is *moved* to CODE-VALUE at the start of each non-CF body group:

```
FD  REPORT-FILE
    RECORD CONTAINS 140 CHARACTERS
    REPORT IS MAIN-ACCOUNTS.
...
RD  MAIN-ACCOUNTS
    LINE LIMIT IS 132
    CODE IS WS-ACCOUNT-REF ...
```

### 2.5.4 Compatibility

1. OS/VS and DOS/VS COBOL allow only the format: **WITH CODE mnemonic-name**. The corresponding literal defined in SPECIAL-NAMES must be **one** character.

## 2.6 CONTROL clause

This clause should be coded in your RD if your report has additional lines, such as **total lines** and **subheadings**, that are to be produced upon a change of value in one or more **"key" fields** (known as *control fields* or simply *controls*).

### 2.6.1

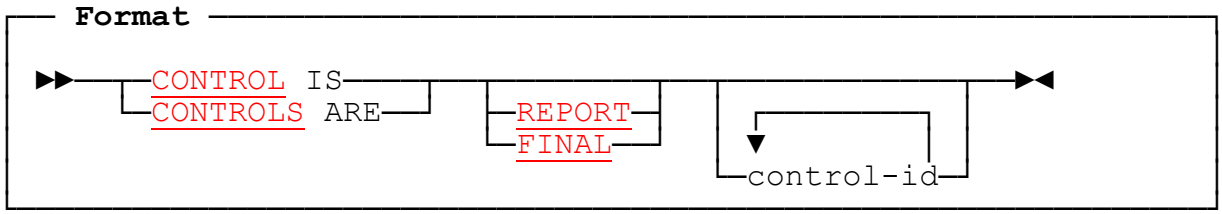


### 2.6.2 CONTROL Clause: Coding Rules

1. As the format shows, you may code either the special keyword REPORT (or its equivalent, FINAL), or a list of identifiers (control-ids), or both. Commas are optional but helpful separators here, but you should code at least one space or new line between the operands. At least one operand must be coded.

2. *REPORT*, if present, must appear first in the list of control-ids. You may omit REPORT even if you refer to it in the Report Description. *FINAL* is an alternative name for REPORT.

3. Each *control-id* must be REPORT/FINAL or the name of an **unedited data item** in the DATA DIVISION of your program. It must **not** be a special register in the REPORT SECTION, such as PAGE-COUNTER. You may include qualifiers and subscripts if necessary. A PICTURE of a control-id should not have a "V" (implied decimal point) symbol.

4. You cannot use the same control-id more than once in the same CONTROL clause (unless a redefinition is used), but you **can** use the same control-id in different RDs.

5. If the OSVS option is in effect, control-ids may be required to be either *group* items or unedited *alphanumeric* or *numeric* DISPLAY items with a maximum size. Thus edited items and items with a USAGE of COMPUTATIONAL or INDEX are prohibited. Details will be found in *Installation and Operation*. If you would like to use such an item as a control without restrictions on its format, you can simply REDEFINE it or use a group level item containing only the item in question:

```
       05  MONTH-X.
         07  MONTH       PIC 99  COMP.
       05  next-item ...
RD ...  CONTROL IS MONTH-X.
```

6. It **is** acceptable for your control fields to **overlap**. The following usage is therefore allowed:

```
03  ACCOUNT-CODE.
  05  BRANCH                PIC 99.
  05  FILLER                 PIC XX.
  ... CONTROLS ARE BRANCH, ACCOUNT-CODE ...
```

7. Coding the CONTROL clause enables you to include some additional elements in your report description, namely:

   - You can specify a *CONTROL HEADING* and/or a *CONTROL FOOTING* group for **each** control-id, if needed. (See 3.24 *TYPE clause*.)
   - You can code *PRESENT/ABSENT AFTER* clauses (formerly known as GROUP INDICATE) with any of the control-ids as operand to cause report fields, lines etc. to appear or disappear after a change in its value. (See 3.17 *PRESENT AFTER clause*.)
   - You can **defer** the *RESETting* (zeroing) of a total field until after a change in a higher control. (See 3.23 *SUM clause*.)

### 2.6.3 CONTROL Clause: Operation

1. You code a CONTROL clause when your report has a structure based on changes in the value of one or more "key" or *control* fields, whose names you list in the CONTROL(S) clause. Report writer does **not** sort your data (to do that you could use *COBOL SORT*) but, assuming that your data is sequenced according to the control fields, report writer can perform certain actions automatically, such as the production of a *CONTROL FOOTING* and a *CONTROL HEADING* group when its contents change. It is also possible for a single CONTROL FOOTING group to be used for more than one level of control. (See 3.24 *TYPE clause*.)

   In the following diagram, there are **two** levels of control. Two CONTROL HEADING groups and one CONTROL FOOTING have been coded. (There is no *CONTROL FOOTING FOR YEAR*.) The "boxes" around each of these groups shows their extent.

   We have used some abbreviations in the following code - for example omitting the SOURCE and TYPE keywords - to save space. To shorten it further, you could abbreviate CONTROL HEADING FOR YEAR and CONTROL FOOTING FOR YEAR as **CH YEAR** and **CF YEAR**.

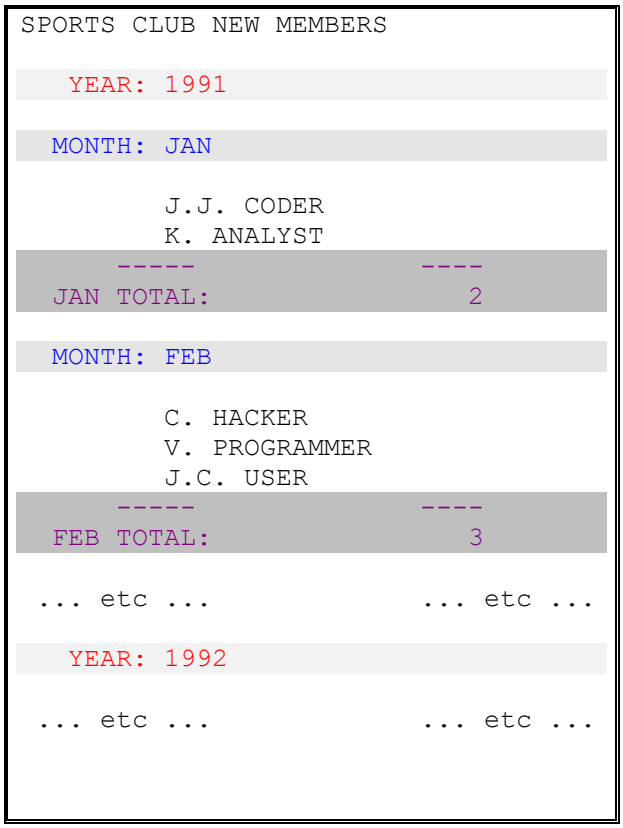


```
RD  ...
    CONTROLS ARE YEAR, MONTH.
01  CONTROL HEADING FOR YEAR.
  03  LINE + 2.
    05  COL 3     "YEAR:".
    05  COL + 2   PIC 9(4) YEAR.
01  CONTROL HEADING FOR MONTH.
  03  LINE + 1.
    05  COL 2     VALUE "MONTH:".
    05  COL + 2   PIC XXX MONTH.
```

*Your CONTROL FOOTING may have underlines etc. Include them all in the CF group!*

```
01  NEW-MEMBER DETAIL.
  03 ...
01  CONTROL FOOTING FOR MONTH.
  03  LINE COLS 5 20
      "-----" "----".
  03  LINE.
      05  COL 2     PIC XXX MONTH.
      05  COL + 2   "TOTAL:".
      05  COL 20    PIC ZZZ9
          COUNT OF NEW-MEMBER.
```

The preceding diagram illustrates the following important points:

a. Your CONTROL HEADING and CONTROL FOOTING groups are coded as separate *01*-level report groups.

b. You can lay out CH and CF groups exactly as you like, just as you would for a DETAIL; **report writer imposes no pre-defined format on any groups**.

c. If you need a different CONTROL HEADING at more than one level (YEAR **and** MONTH in our example), you must code a new group for each level. This means that all groups may have different layouts. In this example, this applies also to the CONTROL FOOTING groups. (However, you can if you wish use the **same** group description for both levels by coding **TYPE CF FOR YEAR, MONTH**.)

d. Report writer produces your CONTROL HEADING group at the **start** of **each** new value of the control. Similarly, it produces your CONTROL FOOTING group at the **end** of **each** new value of the control.

e. CONTROL FOOTING groups are produced using the control values that existed before the control break. (See next item below for a fuller description of this.)

f. Both the CONTROL HEADING and the CONTROL FOOTING groups are **optional** for each *control-id*. You may code just a CONTROL HEADING group, or just a CONTROL FOOTING group, or neither.

2. The reserved word *REPORT* (or *FINAL*) is a special case representing the *highest possible control*. **It is not a data-name**. Include this as the first of your set of controls if you need special action to be taken **once only** at the beginning and end of the report; for example, if you require *grand totals* to be produced for the entire report.

3. Report writer keeps an internal copy of the *pre-break* contents of each control so that it may detect changes in the controls, known as *control breaks*. Ignoring the special case REPORT or FINAL for the moment, whenever your program issues a *GENERATE* statement, the CONTROL clause causes report writer to compare the contents of each control with its contents when the **previous** GENERATE was executed. The first control is examined first, then the second and so on. If no changes are found in any of the controls, no special action is taken. As soon as a change is found in a control, no further controls are examined. **A break in a higher control always implies a break in all the lower controls** , whether their contents have actually changed or not. (Obviously, 1991's JANUARY is a different month from 1992's JANUARY.) If you have more than one control, they must therefore have a *hierarchy*. Here are some examples:

| Structure of your data: | Format of the CONTROL clause: |
|---|---|
| MONTH within YEAR | CONTROLS ARE YEAR, MONTH |
| CITY within COUNTY within STATE | CONTROLS ARE STATE, COUNTY, CITY |

Your *control-names* must exist somewhere as data-names in the program outside the REPORT SECTION. For example, if in the last case the data-names in your file layout are actually written CUST-STATE, CUST-COUNTY, CUST-CITY, then your CONTROL clause would have to be written: CONTROLS ARE CUST-STATE, CUST-COUNTY, CUST-CITY.

4. When a control break is detected, if your report has CONTROL FOOTING groups, each control field is first saved in a temporary holding area and is then **overwritten with the contents it had before the break** for the duration of the production of the CONTROL FOOTINGs. This means that your program will use the **before-the-break** contents of any CONTROL field (for example in a SOURCE, or a PRESENT WHEN) in the following TYPEs of group:

   a. a CONTROL FOOTING;

   b. a PAGE HEADING or PAGE FOOTING, when the page advance was caused by a CONTROL FOOTING;

   and in the following situations:

c. when it is used as a SOURCE or SUM operand, either as it is or as a *subscript* or *qualifier*, or as part of an expression;

d. when it is used as part of a *condition*;

e. when it appears in a *parameter* to a FUNCTION;

f. when it is referenced implicitly, that is, via a redefinition, or via a group field or subordinate field or an intersecting field.

Only *control* fields exhibit their before-the-break values when referenced at *CONTROL FOOTING time*. To obtain the *before-the-break* value of a field **other than** a control field, you should use a *Declarative* procedure to save its current value (see 4.7.3 *USE BEFORE REPORTING Directive: Operation*).

After the lowest-level CONTROL FOOTING has been produced, and before any CONTROL HEADING or DETAIL groups are output, the current contents of all controls are **restored** . For a full description of the steps, see 4.2 *GENERATE statement*.

5. Report writer will not detect a control break until your program issues a *GENERATE*. If a control field in your input data changes several times but no GENERATE is issued during that time, no control breaks will be detected.

6. Your CONTROL identifiers need not be chosen just from ready-made locations in your input files or database. You may also "manufacture" them in *WORKING-STORAGE*. As a simple example, you may wish to print subtotals by quarter, although your main input gives just the months:

```
RD  ...
    CONTROL IS W-QUARTER ...
    ...
    COMPUTE W-QUARTER = (F-MONTH-NO + 2) / 3
```

7. You cannot define more than one CONTROL HEADING or CONTROL FOOTING for a given *control-id* in your report. However, cases sometimes occur when you would like **two** CONTROL FOOTING report groups for the **same** level of control. You may achieve this referring to the same control field under a different name, as in the following case, where we must have two groups because the second part begins on a new page:

```
    05  W-ACCT-NO-1     PIC X(6).
    05  W-ACCT-NO-2     REDEFINES W-ACCT-NO-1    PIC X(6).
*
REPORT SECTION.
RD  ...
    CONTROLS ARE W-ACCT-NO-1 W-ACCT-NO-2 ...
    ...
01  GRP-A    TYPE CF FOR W-ACCT-NO-2.
  03  LINE + 3.   ...
  ...
01  GRP-B    TYPE CF FOR W-ACCT-NO-1.
  03  LINE NEXT PAGE.   ...
```

Here, the two controls W-ACCT-NO-1 and W-ACCT-NO-2 are physically the same field. Consequently, there will be a break in the *higher* control whenever there is a break in the *lower* control, and the two CONTROL FOOTING groups, GRP-A and GRP-B, will always appear together in that order.

8. Report writer will consider a control break to have taken place if there is **any** change in the bit-pattern of the control field. For example, if the field is *packed decimal* (COMPUTATIONAL-3), a value of (hex) 123C and (hex) 123F will be considered different, even though they both represent the same numeric value. If this property is undesirable, your program should MOVE such a field to a DISPLAY field and use the DISPLAY field as the control field.

9. If your program has several Report Descriptions, each report is processed independently of the others. You can decide separately for each report whether it will have a CONTROL clause and which controls to specify. When you issue a *GENERATE* for a report that has controls, report writer examines the controls for that report only, ignoring all the others.

10. Non-Hierarchical Control Structures.

In some report structures, there may appear to be controls which are in *parallel* rather than *hierarchical* arrangement. For example:

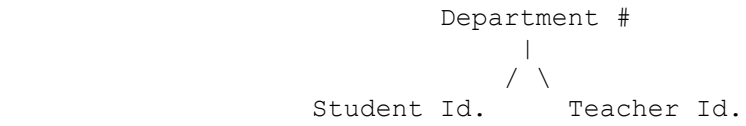


The organization of records in your file might be:

Department A:
STUDENT record #1
STUDENT record #2
STUDENT record #3
... etc ...
TEACHER record #1
TEACHER record #2
TEACHER record #3
... etc ...
Department B:
... etc ...

As you see, there is no hierarchical relationship between STUDENTs and TEACHERs. You might wish to print a CONTROL FOOTING group for the STUDENT records in each Department and a CONTROL FOOTING group of quite different appearance for the STUDENT records. To achieve this you must regard the two different CONTROL FOOTING groups as different versions of the **same** CONTROL FOOTING and use a PRESENT WHEN clause to distinguish them (see 3.18). Make the STUDENT-TEACHER indicator an extra lower control. Here is a skeleton solution:

```
RD  ACADEMIC-LIST ...
    CONTROLS ARE DEPARTMENT-NO STU-TEA-FLAG.
...
01  CF FOR STU-TEA-FLAG.
  03  PRESENT WHEN STU-TEA-FLAG = "S".
    05  LINE + 2   ... <layout for STUDENTs>
  03  PRESENT WHEN STU-TEA-FLAG = "T".
    05  LINE + 2   ... <layout for TEACHERs>
```

11. There may be other purposes for specifying an item as a control. You might include it for the following reasons:

    a. To trigger a PRESENT AFTER clause (or a GROUP INDICATE clause), or The RESET Phrase of the *SUM* clause.

    b. To force a control break even though a lower control has not changed. You might want to output just **monthly** totals over several years' data. If you then declare **MONTH** as a control you must include **YEAR** too as a higher control, because it is quite possible for JANUARY 1991 to be followed immediately by JANUARY 1992 if you happen to have no data for FEBRUARY to DECEMBER 1991. (Note: in **this** example, you could also solve the problem by having just one control, **YEAR-MONTH**, if they are contiguous.)

    c. Because you may want to use the field as a SOURCE at CONTROL FOOTING time and you want to obtain the **previous** value of the field. (See item 4 above.) For example, you might have both CUSTOMER-NUMBER and CUSTOMER-NAME. By making CUSTOMER-NAME a control field following CUSTOMER-NUMBER (the "*true*" control field), you can be sure that you will see only the **pre-break** values of CUSTOMER-NAME at Control Footing time.

    d. For documentary purposes. The lowest-level controls need not be used at all in the program.

    e. If the program's SPECIAL-NAMES paragraph contains an **ALPHABET** clause, you may need to use the *NOXCAL* option to ensure that the specified collating sequence is used. See *Installation and Operation*.

### 2.6.4 Compatibility

1. The use of *REPORT* as an alternative to FINAL is unique to new Report Writer.
2. Only new Report Writer allows control fields to **overlap**.
3. Only new Report Writer forbids the use of a COMPUTATIONAL item as a CONTROL field under certain circumstances. New Report Writer regards two instances of a COMP-3 control to be different if their sign is hex C in one case and hex F in the other, even though all the remaining digits may be equal.
4. Only new Report Writer checks that all the *control-ids* in a given CONTROL clause are different.

# 2.7 LINE LIMIT clause

This clause indicates the **maximum number of columns** likely to be required for the longest line of your report. It enables report writer to check that all of your report fields appear within the limits of the report line, and to **warn** you if there is any danger of data being lost beyond the right-hand extremity of the lines.

## 2.7.1

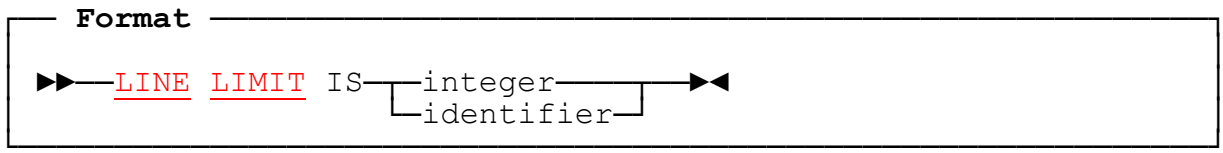


## 2.7.2 LINE LIMIT Clause: Coding Rules

1. The value coded gives the **maximum line width**, in other words the greatest number of print columns required for your report. You may simply enter the column width of your printer, for example: *LINE LIMIT IS 132* or, if your report is clearly designed to take up less than this number of columns, use that value instead. Do **not** allow for the *carriage control character*.

2. The *identifier* form of the clause is used if you wish the width of your report line to assume different values at different times. This form of the clause takes effect only when you use either the REPEATED clause (see 3.19), or the WRAP clause (see 3.28). The *identifier* must be an unedited numeric field.

3. If the *FD* entry for the corresponding report file contains a *BLOCK* or *RECORD CONTAINS integer CHARACTERS* clause (other than BLOCK CONTAINS **0** CHARACTERS), the value of *integer*, after allowing for the carriage control character (if the *NOADV* option is in effect), and the size of any CODE field, must not be less the LINE LIMIT, or its default value (see item 3 in the section below).

## 2.7.3 LINE LIMIT Clause: Operation

1. If any report field extends beyond the maximum line width given in your LINE LIMIT clause, report writer will signal a fault, either at *compile* time or, if that is not foreseeable, at *run* time.

2. If you use the *identifier* form of the clause, report writer evaluates its contents dynamically at *INITIATE* time and uses that as the value for the clause. For the purpose of checking the validity of COLUMN numbers, it will use the default maximum value described below. The value set up by the *identifier* is used at run time for the following purposes:

   a. to vary the number of REPEATED groups that may be placed side-by-side (see 3.19 *REPEATED clause*),

   b. as one means of adjusting the *right margin* when the WRAP clause is used to produce line *wrap round* (see 3.28 *WRAP clause*),

c. to check for (illegal) line overflow in variable-position report fields when the *WRAP* clause is **not** used.

3. If you omit the LINE LIMIT clause, report writer will assume a default value of the **maximum line width**. This is set to 256 in the report writer software as supplied but this default may be changed by customization to any lesser value (see *Installation and Operation*).

4. The LINE LIMIT need not be the same as *logical record length* of the report file. The latter is established from the computed maximum length of the lines of the report, or from the *RECORD* or *BLOCK CONTAINS* clauses if present (see 2.2.3 *FILE-CONTROL and FD: Operation*).

5. An internal special register with the reserved name *LINE-LIMIT* is established in the Report Control Area, containing the value specified in the LINE LIMIT clause, or its default value.

### 2.7.4 Compatibility

1. The LINE LIMIT clause is unique to new Report Writer. OS/VS and DOS/VS COBOL do not perform checks on the feasibility of COLUMN numbers.

# 2.8 OVERFLOW clauses

The *OVERFLOW* clause tells report writer how to **protect your program** from arithmetic errors, such as *zero divide*, that would cause an elementary COBOL program to fail. The *SUM OVERFLOW* clause tells report writer what action to take if a total field overflows - an event which is more likely to happen than with other report fields. It may be difficult to estimate the number of digits needed for totals, since this will depend on the number and content of items to be accumulated into the totals. Use these clauses if you need to change the **standard** action.

## 2.8.1

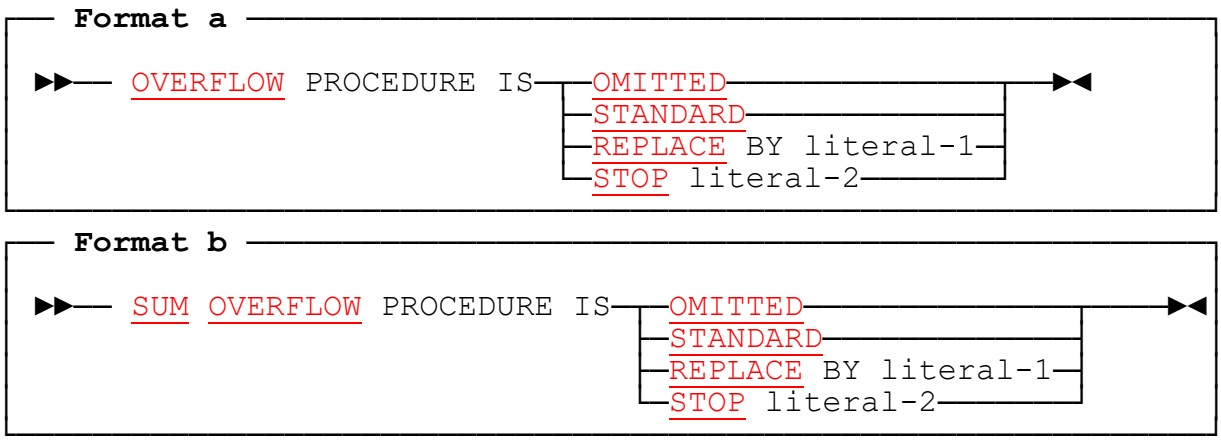


## 2.8.2 OVERFLOW Clause: Coding Rules

1. The *OVERFLOW* (*format a*) and *SUM OVERFLOW* clauses (*format b*) are distinct clauses and you may choose a different option for each.

2. If your program contains **no** SUM clauses, the SUM OVERFLOW clause is not required. Similarly, if your program has no clauses of the form *SOURCE arithmetic-expression* , the OVERFLOW clause is not required. In either case, the clause may nevertheless be coded and it then has no effect.

3. Use the *OMITTED* option if your report uses *arithmetic expressions* or has a SUM clause respectively but there is no likelihood of a size error.

4. Use the *REPLACE BY* option if your report may be sensitive to improbable values in the user's data and you would like to show on the report exactly where errors have occurred. *REPLACE BY* can be followed by either a numeric or a non-numeric *literal-1*, whatever the PICTURE of your report field.

5. Use the *STOP* option only if SUM or arithmetic overflow is extremely unlikely but potentially damaging and you are content for your program to execute an "emergency" *COBOL STOP* in such a case.

### 2.8.3 OVERFLOW Clause: Operation

1. The OVERFLOW clause takes effect if your program contains clauses of the form *SOURCE arithmetic-expression*. On each occasion that the expression is evaluated a check may be made in case the result is too large for the report field. Also, if any expression involves a division step there could be a zero divide error, such as *FIELD-A / FIELD-B* when FIELD-B contains zero.

2. The SUM OVERFLOW clause takes effect if your program contains a SUM clause. On each addition, a check may be performed for *size error*. This clause does not affect any of the other functions of the SUM clause, such as the *resetting* (zeroing) of the totals. The default in each case is *STANDARD* (see below).

3. If you choose the *OMITTED* option the effect is as follows:

   **OVERFLOW**: Report writer will not perform any checks for arithmetic overflow. This will save a small overhead on the evaluation of expressions. If a size error occurs, then at best your report field will have some **high-order** digits truncated. If a zero divide error occurs, your program will **fail at run time**.

   **SUM OVERFLOW**: Report writer will not perform any checks for SUM overflow. This will save a small overhead on totalling. If a size error occurs, at least one **top** digit will be truncated and lost from the total field.

4. If you choose the *STANDARD* option, the effect is as follows:

   **OVERFLOW**: Report writer will always check for size error, or zero divide, when it evaluates each *SOURCE* expression. If this happens, your report field will be **blank** and a run time error 10 will be indicated.

   **SUM OVERFLOW**: Report writer will check for size error on each addition into a total field. If this happens, a run time error 11 will be indicated. **No** adding will take place into your total field and you will obtain the total up to the point just after the last valid addition.

5. If you code the *REPLACE BY* option, the effect is as follows:

   **OVERFLOW**: Report writer will check for a size error or zero divide and, if this occurs, it will place your specified *literal-1* in the SOURCE report field instead of the erroneous value.

   **SUM OVERFLOW**: Report writer will check for a size error and, if this occurs, it will place your specified *literal-1* in the SUM report field instead of the erroneous value.

   In either case, if you choose a **numeric** *literal-1*, this value will be stored according to the rules of the *MOVE* statement. If you choose a **non-numeric** *literal-1*, the literal will be stored, as for a *MOVE*, in your report field, treated as though it were redefined as an unedited alphanumeric field (PIC X...). For example, if overflow occurs and your report field is defined as:

```
05  COL 20   PIC ZZZ9.99  SOURCE NUM-ORDERED * UNIT-PRICE.
```

and your RD contains the clause: **OVERFLOW PROCEDURE IS REPLACE BY ZERO**, the following will appear:

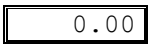


and if your RD contains the clause: **OVERFLOW PROCEDURE IS REPLACE BY ALL "?"**, the following will appear:

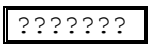


6. If you code the *STOP* option, report writer will execute a COBOL *STOP literal-2* as soon as an error is detected.

### 2.8.4 Compatibility

The OVERFLOW and SUM OVERFLOW clauses are unique to new Report Writer. The *SUM OVERFLOW IS OMITTED* option emulates the effect of OS/VS and DOS/VS COBOL's built-in Report Writer.

## 2.9 PAGE LIMIT clause

The PAGE LIMIT clause should be coded if your report is to be divided into pages. It also allows you to sub-divide the page into regions for the headings, main data, and footings.

### 2.9.1

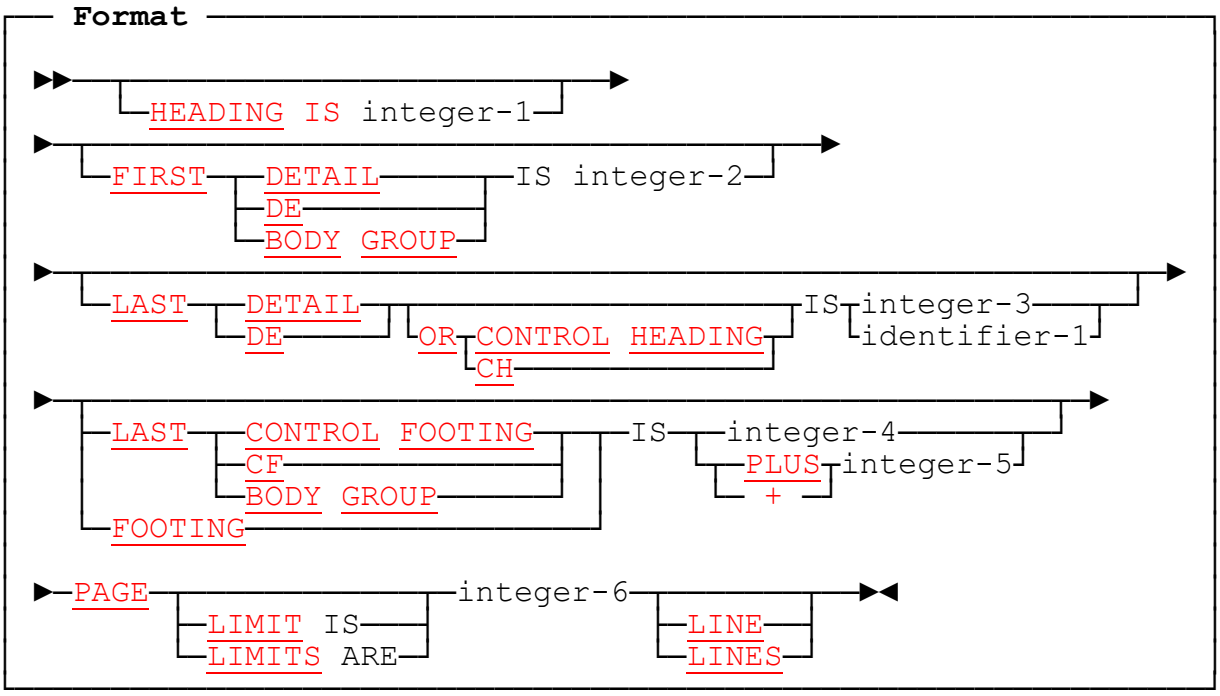


### 2.9.2 PAGE LIMIT Clause: Coding Rules

1. The format above gives you choices of keywords, and in each case the different keywords have the same meaning. Traditionally, the sub-clauses were referred to as the ***HEADING*** , ***FIRST DETAIL***, ***LAST DETAIL***, and ***FOOTING*** phrases. We also usually refer to the whole clause as the ***PAGE LIMIT*** clause, even though the word LIMIT is optional.

2. Each of the sub-clauses is optional, but none of the first four sub-clauses may be present without the PAGE LIMIT sub-clause. You may code the sub-clauses in **any order** , and they may appear anywhere in the *RD* statement. The order shown follows a natural progression from the top to the bottom of the page and is therefore recommended for maximum lucidity.

3. The values of *integer-1*, *integer-2*, *integer-3*, and *integer-4* (if you code their sub-clauses), and *integer-6* represent the start and finish points of various regions of your page, working down from the top to the bottom. Ensure that the regions start and finish in the order shown in the diagram below (see 2.9.3). Any two integers may be equal. All integers must lie between 1 and 9999 inclusive.

4. If you use the *identifier* form of the LAST DETAIL sub-clause, the identifier used must be an **unedited** numeric field and its value at every generation of your report must lie between the FIRST DETAIL and LAST CONTROL FOOTING positions, inclusive.

5. By using the + *integer-5* form of the LAST CONTROL FOOTING sub-clause, you specify the extra lines to be made available to CONTROL FOOTING groups. Ensure that you cannot exceed the PAGE LIMIT: that is, the LAST DETAIL value (*identifier-1* or *integer-3*) + the LAST CF offset (*integer-5*) must be not greater than the PAGE LIMIT (*integer-6* ).

6. The FIRST four PAGE LIMIT sub-clauses may all be **omitted**. Here are some guidelines on their use:

   a. **HEADING** is **never** required. However, if your report has a PAGE HEADING that begins with a **relative** LINE, you may use HEADING as an *anchor* point for the start of that group.

   b. **FIRST DETAIL** should be coded if you have a PAGE HEADING group, especially one that might **vary in depth**, and you want the body of the page to follow at a **fixed** position underneath it.

   c. **LAST DETAIL** should be coded if you have a PAGE FOOTING group and want the body of the page to end short of the line preceding it or if you want to use LAST DETAIL in conjunction with LAST CF as described in the next paragraph. Use the *LAST DETAIL identifier* form if you want to vary the logical page depth dynamically.

   d. **LAST CF** (or *LAST CONTROL FOOTING*, or *FOOTING*) should be coded if you have CONTROL FOOTING groups and want to leave some space before the PAGE FOOTING begins. (If the *OSVS* option is **not** in effect, this may be provided automatically - see item 7 in the next section below.)

7. If you omit the PAGE LIMIT clause, your report will consist of one continuous stream of output without page breaks. Your Report Group Descriptions will then **not** be able to contain absolute LINE (see 3.10 *LINE clause*), or NEXT GROUP (see 3.13 *NEXT GROUP clause*), PAGE HEADING and FOOTING groups, or any form of any clause that makes use of the keyword *PAGE*.

### 2.9.3 PAGE LIMIT Clause: Operation

1. The PAGE LIMIT clause enables report writer to assign regions to your page. The following diagram shows how the various regions are mapped onto your page:

Regions of the Page

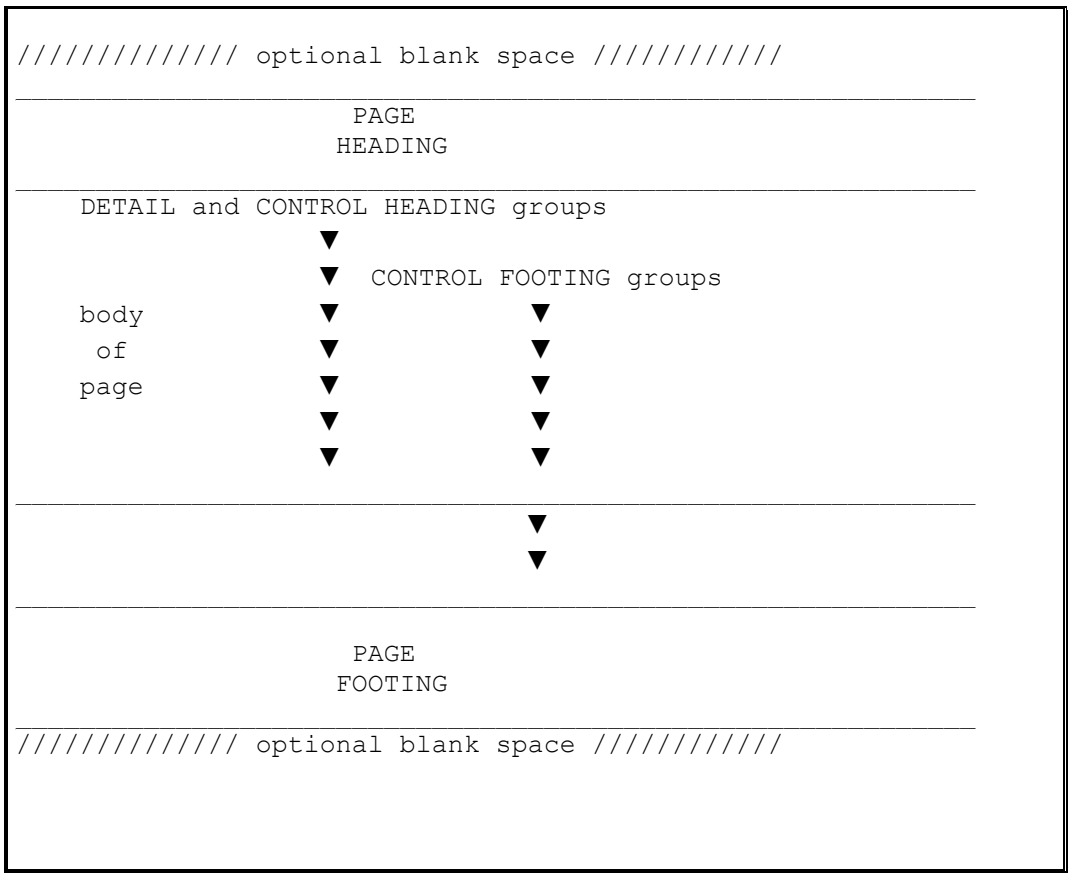


◄ Top of physical page (logical LINE 1)

◄ HEADING integer-1 *reserved for PH*

◄ FIRST DETAIL integer-2

*reserved for body groups (CH,DE,CF)*

◄ LAST DETAIL integer-3 *for CF only*

◄ FOOTING (=LAST CF) integer-4 *reserved for PF*

◄ PAGE LIMIT

◄ Bottom of physical page

Each of your groups will be checked to fit into its appropriate region. (The *REPORT HEADING* and *REPORT FOOTING* groups are special cases.) The fitting of groups on the page is described in detail in the next part (see 3.10 *LINE clause*).

2. If you code a *HEADING* sub-clause, its value will be used in the case where you have a PAGE HEADING or a REPORT HEADING group whose first LINE clause is **relative** . Those groups will then be positioned relative to the value of HEADING **minus 1**. (Compare the different rule for the positioning of a relative first LINE clause in a **body** group at FIRST DETAIL, see 3.10 *LINE clause*.)

3. The region between FIRST DETAIL and LAST CONTROL FOOTING inclusive is the *body* of the page. Apart from the optional REPORT HEADING and REPORT FOOTING groups, which may appear anywhere on the page, only **body** groups (CONTROL HEADING, DETAIL, and CONTROL FOOTING) will appear in this region. However, if a PAGE HEADING group encroaches into the FIRST DETAIL position, a diagnostic message (096) will be issued and the first body group will appear immediately after the PAGE HEADING group (as though the FIRST DETAIL were *absent* - see below).

4. CONTROL HEADING and DETAIL groups are not allowed to appear below the *LAST DETAIL* position. If LAST DETAIL is above LAST CONTROL FOOTING, your CONTROL FOOTING groups will thereby have extra space available to them. This extra space reduces the likelihood of the displeasing effect that results when they are forced to the top of a page. (See 3.10 *LINE clause* for more details.) You can **imply** this spacing by making LAST DETAIL fall short of PAGE LIMIT (or short of the line before the PAGE FOOTING if you have one). An alternative way to indicate this extra space is to code: LAST CONTROL FOOTING IS **+integer-5**.

5. If you code the *identifier* form of the LAST DETAIL sub-clause, report writer will take the contents of the identifier at the start of each GENERATE and use that as the value for the sub-clause.

6. If you use the *relative* form of the LAST CONTROL FOOTING sub-clause (with **+**), the number of lines you specify will be **added** to the LAST DETAIL value to give the LAST CONTROL FOOTING value. For example: *LAST CONTROL FOOTING + 3* specifies that **3** extra lines are to be available during the page-fit for CONTROL FOOTING groups, regardless of any variations in an identifier operand of LAST DETAIL.

7. If you omit any of the first four optional sub-clauses, and report writer needs their values, it will **infer default** values according to the following rules:

**no HEADING:** = 1; that is, the **top** of the logical page.

**no FIRST DETAIL:**

a. If there is **no** PAGE HEADING, the value of HEADING is the default; hence, if HEADING is allowed to default to 1, the body of the report will begin at the top of the page.

b. If there **is** a PAGE HEADING, then the line immediately following the PAGE HEADING group, that is, the body of the report, will start immediately after the PAGE HEADING. If your PAGE HEADING varies in size, you may deliberately **omit** FIRST DETAIL, and the body of your page will adjust itself to take up all the space available.

**no LAST DETAIL:**

a. If there is a LAST CONTROL FOOTING (other than the **+** form), LAST DETAIL takes the same value, that is, all your body groups will be allowed to come down to the LAST CONTROL FOOTING position.

b. If there is a LAST CONTROL FOOTING with the + *integer-5* form, then (first line of the PAGE FOOTING) - 1 - *integer-5* is used; that is, report writer will use as much of the page as possible, allowing for any PAGE FOOTING, and leave *integer-5* extra lines for the CONTROL FOOTING group(s).

c. If there is **no** LAST CONTROL FOOTING, then the same default is used as for LAST CONTROL FOOTING (see next).

**no LAST CONTROL FOOTING**:

a. If the *OSVS* option is in effect and there is a LAST DETAIL, this value is also used for the LAST CONTROL FOOTING. In all other cases:

b. If there is **no** PAGE FOOTING, then the *PAGE LIMIT* is used; that is, your CONTROL FOOTING groups will be allowed to come down to the bottom of the page. (If you use the *identifier* form of LAST DETAIL, there is an exception to this rule: LAST CONTROL FOOTING will be the same as LAST DETAIL.)

c. If there **is** a PAGE FOOTING group, then the last line before the PAGE FOOTING is used. (If the PAGE FOOTING is a relative group, this is calculated by placing the last line of the PAGE FOOTING at the PAGE LIMIT.) Note that this default action differs from ANS COBOL, where LAST CONTROL FOOTING defaults to LAST DETAIL, if you specify it. This extension has the advantage that the LAST CONTROL FOOTING sub-clause can be omitted in most cases without misalignment of CONTROL FOOTING groups or wastage of space at the bottom of the page.

8. The following examples show some possible forms of this clause:

a.
```
PAGE LIMIT 60.
```

This form is **valid for all situations** because of the defaults. All your body groups will fit between your PAGE HEADING (or line 1 in its absence) and your PAGE FOOTING (or line 60 in its absence).

b.
```
FIRST DE 5
LAST CF +3
PAGE LIMIT 60.
```

This reserves lines 1-4 for the PAGE HEADING and, if your report has no PAGE HEADING, they will be left blank. Your CONTROL FOOTING groups may come down to the line before any PAGE FOOTING, or line 60 if there is no PAGE FOOTING, but CONTROL HEADING and DETAIL groups must end 3 lines before that point.

c.
```
LAST DETAIL WS-PAGE-SIZE
PAGE LIMIT 60.
```

Here the value of WS-PAGE-SIZE will be used as the lower limit for **all** body groups (since the *identifier* form of LAST DETAIL causes LAST CONTROL FOOTING to default to *LAST DETAIL* instead of to *PAGE LIMIT*).

### 2.9.4 Compatibility

1. The alternative spellings *DE* for DETAIL, *FIRST BODY GROUP* for FIRST DETAIL, *LAST DETAIL OR CONTROL HEADING / CH*, *LAST CONTROL FOOTING / CF*, and *LAST BODY GROUP* are unique to new Report Writer.

2. The concept that each keyword may introduce a clause in its own right is unique to new Report Writer. OS/VS and DOS/VS COBOL require the keyword *PAGE* to appear first and do not allow different phrases of the PAGE LIMIT clause to be separated by another clause.

3. OS/VS and DOS/VS COBOL require the keyword *LINE* or *LINES*.

4. The defaults assumed by OS/VS and DOS/VS COBOL are not sufficient to allow omission of the clauses in most cases as they are with new Report Writer. Where new Report Writer's defaults are different from those of OS/VS COBOL and DOS/VS, no undetectable incompatibility will result, because in these cases the different defaults assumed by OS/VS and DOS/VS COBOL cause compilation errors.

# 3

# Report Group Descriptions

This part describes in detail every aspect of the *Report Group Descriptions* that follow your *RD* entry in the *REPORT SECTION*. After the next section, the sections are in alphabetical order for easy reference.

If you are migrating older programs written using OS/VS or DOS/VS COBOL's built-in Report Writer, you should refer to the *Compatibility* paragraph at the end of each section, which points out any new Report Writer features that these compilers do not accept.

# 3.1 Introducing Report Groups

## 3.1.1 What is a Report Group?

A *report group* is an **uninterrupted block** of report lines, from zero up to any number. With the exception of *MULTIPLE PAGE* groups (see 3.12 *MULTIPLE PAGE clause*), the lines in a report group are always together on the **same page** and are generated in a **single** operation. Of the seven *TYPE*s, all but the *DETAIL* groups are produced automatically. Your program issues at least one GENERATE statement for each DETAIL group (or for the report as a whole), and any other groups that you have defined are **automatically generated** in the correct positions relative to the DETAILS, depending on their *TYPE*.

Your RD entry may be followed by any number of *Report Group Descriptions*, but there is a limit to the number each TYPE other than DETAIL. Each Report Group Description begins with a *01* level-number entry in the A-margin.

More information about report groups follows or may be found later in this part (see 3.24 *TYPE clause*).

## 3.1.2 Report Groups: Keyword Table

The following table lists the major report writer keywords that may appear in a Report Group Description, with a summary of their purposes. The third and fourth columns tell you whether or not the item is provided by IBM's OS/VS and DOS/VS COBOL and, if so, whether *COBOL Report Writer* extends the facilities. The clauses may be found, listed in alphabetical order by keyword, following this section.

If you wish to remain compatible with OS/VS or DOS/VS COBOL, you should avoid the new keywords and the extensions to the old ones, possibly by using the option described in *Installation and Operation* to restrict your use of extended features. You will find additional information on this subject in the **Compatibility** paragraph at the end of each section.

## Report Groups: Keyword Table

| Keyword | Purpose | OS/VS DOS/VS COBOL? | Extensions to OS/VS and DOS/VS COBOL |
|---|---|---|---|
| **TYPE** (01-level only ...) | Indicates whether group is produced automatically, (PH,PF,CH,CF,RH, RF) or GENERATEd explicitly (DE) | **yes** | ▫ TYPE keyword optional<br>▫ optional **FOR/ON** with CH/CF<br>▫ CH FOR control **OR PAGE** form<br>▫ no TYPE = TYPE DETAIL<br>▫ **multiple** CONTROL FOOTING |
| **NEXT GROUP** | Provides extra vertical space between groups | **yes** | ▫ **PLUS** can be written **+**<br>▫ optional words **BODY** and **DE OR CH**<br>▫ optional **ON** before **NEXT PAGE** |
| **GROUP LIMIT** | Gives lowest permissible position for body group | **no** | |
| **MULTIPLE PAGE** | Allows a group to span several pages | **no** | |
| **REPEATED** | Repeats body groups side-by-side across page | **no** | |
| **LINE** (allowed at all levels...) | Specifies vertical position | **yes** | ▫ **PLUS** can be written **+**<br>▫ **multiple** form<br>▫ LINE alone = LINE PLUS 1<br>▫ LINE PLUS ZERO = LINE PLUS 0<br>▫ LINE without subordinate COLUMNs gives blank line<br>▫ absolute may follow relative if group starts with absolute<br>▫ RH/RF or body groups may occupy several pages |
| **OCCURS** | Indicates repeating item | **no** | |
| **VARYING** | Defines internal counter for use as subscript, etc. | **no** | |
| **PRESENT/ ABSENT WHEN** | Gives condition for printing or skipping item | **no** | |

| Keyword | Purpose | OS/VS DOS/VS COBOL? | Extensions to OS/VS and DOS/VS COBOL |
|---|---|---|---|
| **PRESENT/ ABSENT AFTER** | Specifies internal condition for printing/skipping | **no** | |
| **GROUP INDICATE** | Simple form of PRESENT AFTER | **yes** | ▫ may be used at group level |
| **BLANK WHEN ZERO** | Causes zero value to be spaces | **yes** | ▫ allowed at group level |
| **JUSTIFIED** | Changes alignment rules for alphanumeric fields | **yes** | ▫ allowed at group level |
| **SIGN** | Changes output convention for "S" PICTURE symbol | **no** | ▫ **LEADING literal TRAILING literal** format for user-specified "signs" |
| **WRAP** | Allows data to "wrap round" onto continuation lines | **no** | |
| **STYLE** | Invokes a special printer property | **no** | |
| **USAGE** | Documentary | **yes** | ▫ **DISPLAY-1** for DBCS items |
| **COLUMN** (elementary level only ...) | Specifies horizontal position | **yes** | ▫ may be shortened to COL<br>▫ relative form (+ or PLUS)<br>▫ **CENTER** and **RIGHT** options<br>▫ multiple format<br>▫ allowed alone as dummy entry |
| **PICTURE** | Gives format in which field is to be presented | **yes** | ▫ **left-shift** symbols <...> for variable left alignment<br>▫ optional when VALUE "literal"<br>▫ general insertion characters |
| **SOURCE** | Specifies field whose contents are to appear in report item | **yes** | ▫ **SOURCE** keyword optional<br>▫ arithmetic-expression format<br>▫ **ROUNDED** phrase<br>▫ SUM or COUNT term may be used as operand<br>▫ multiple format<br>▫ multiple-choice format |

| Keyword | Purpose | OS/VS DOS/VS COBOL? | Extensions to OS/VS and DOS/VS COBOL |
|---|---|---|---|
| **VALUE** | Specifies fixed value for report item | **yes** | ▫ **VALUE** keyword optional<br>▫ multiple format<br>▫ assumes default PICTURE |
| **FUNCTION** | Specifies run time routine to provide contents of item | **no** | |
| **SUM** | Indicates total-ling of specified item(s) | **yes** | ▫ optional word OF after SUM<br>▫ arithmetic-expression format<br>▫ may be used as term in SOURCE expression<br>▫ allowed in non-CF groups<br>▫ may refer to SOURCE/VALUE<br>▫ ROUNDED phrase<br>▫ ANS-74/85 method (no SOURCE SUM correlation) available<br>▫ automatic check for overflow<br>▫ > 1 SUM clause in entry ok |
| **COUNT** | Counts appearances of item(s) | **no** | |
| **PAGE-/ LINE-COUNTER** | Special registers for page number & vertical position | **yes** | ▫ need not be qualified in REPORT SECTION/DECLARATIVES<br>▫ adding to LINE-COUNTER creates gap on page |
| **COLUMN-COUNTER** | Special register for horizontal position | **no** | |

## 3.2 Coding Report Group Descriptions

A *Report Group Description* is a REPORT SECTION data structure beginning with an *01*-level entry and including any number of lower entries. It may consist of the *01*-level report group entry only. You may code any number of Report Group Descriptions after your RD entry.

### 3.2.1

**Format**

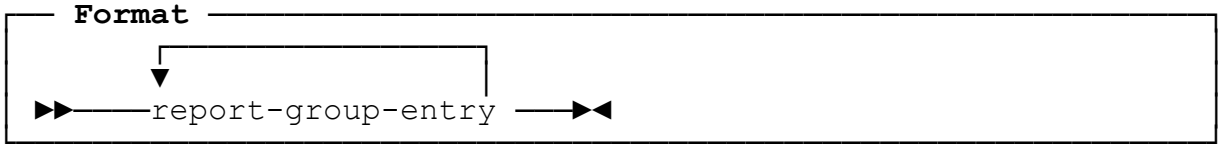


where ***report-group-entry*** is defined as follows:

**Format**

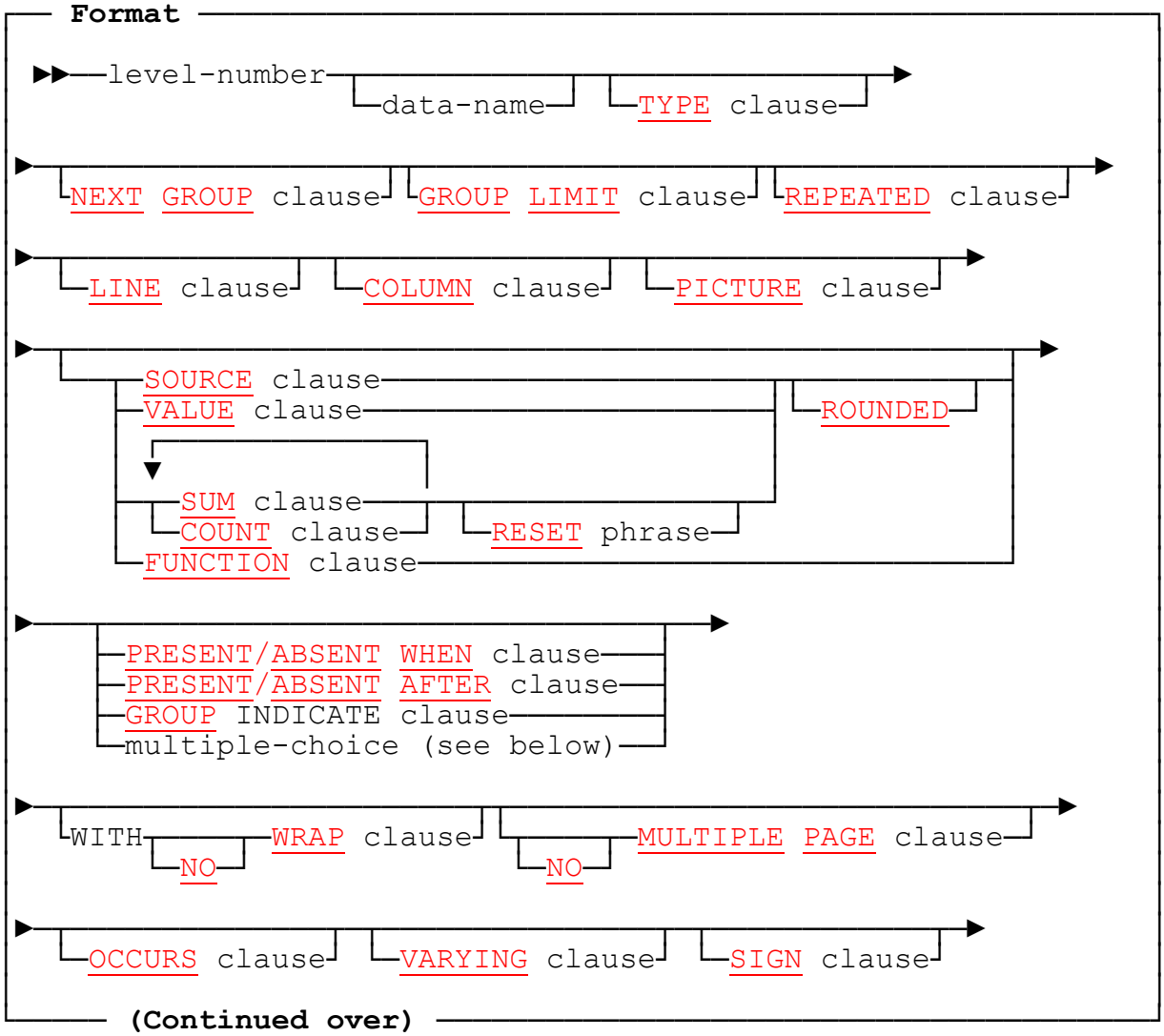


**(Continued over)**

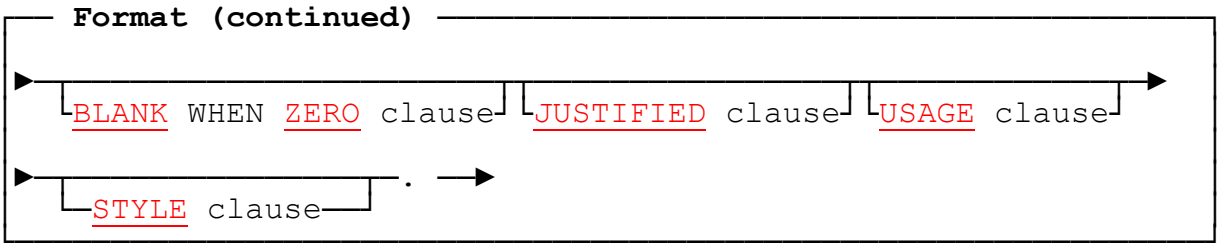


**where** *multiple-choice* is defined as follows:

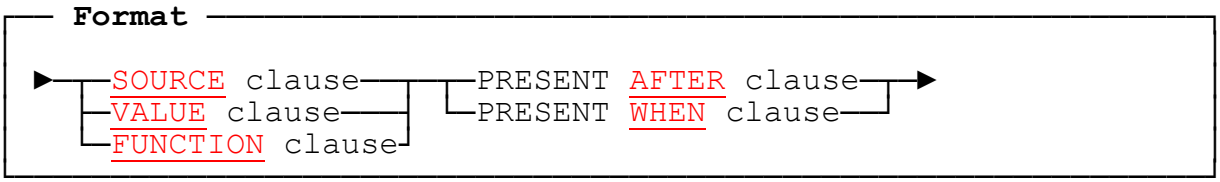


### 3.2.2 Report Groups: Coding Rules

1. Level-numbers are used, as in any DATA DIVISION record, to establish a *hierarchy* of **group** levels above the **elementary** level. The level-number at the start of each report group must be 01. (It may be written without the leading *0*, but we shall still refer to it as the *01-level*.) Choose your lower level-numbers exactly as you would for any other COBOL logical record. (Note that OS/VS and DOS/VS COBOL Report Writer uses the *TYPE*, *LINE*, and *COLUMN* clauses themselves, rather than the level-numbers, to establish hierarchy.)

2. You need not place data-names on your report group entries except in the following cases, where they are *required*:

   a. On the *01*-level entry of a DETAIL group, or any other group that may be referred to in the USE BEFORE REPORTING header of a Declarative SECTION (see 4.7 *USE BEFORE REPORTING directive*). When a data-name is used at the *01*-level, it gives a name to the entire report group and is called the *report-group-name* or *group-name*. The group-name must be **unique** within an RD, but you may **re-use** the name in another RD.

   b. On a **numeric** entry referred to in a SUM clause or term. (See 3.23 *SUM clause*.)

   c. On **any** entry at any level that is referred to in a COUNT clause or term. (See 3.6 *COUNT clause*.)

   In all other cases it is preferable to **omit data-names** since an unnecessary data-name may mislead the program-reader into thinking that it is referred to in one of the ways above. It may also impede the precompiler's optimization.

   Data-names may be *DBCS*.

3. The following general-purpose DATA DIVISION clauses **can** be used in a report group. The first four may be used at both group and elementary levels (not the

*01* -level in the case of OCCURS). **PICTURE** and **VALUE** are allowed only at the elementary level.

**BLANK WHEN ZERO**
**JUST/JUSTIFIED**
**OCCURS**
**SIGN**
**PIC/PICTURE**
**VALUE/VALUES**

but the following **cannot** be used in a report group:

any **USAGE** other than **DISPLAY**, such as **COMPUTATIONAL**
**REDEFINES**
**SYNCHRONIZED/SYNC**
**RENAMES**
**88-level** entries

In addition to the general DATA DIVISION clauses, report groups may contain special-purpose clauses that describe the position and contents of fields. The first four clauses, TYPE, NEXT GROUP, GROUP LIMIT, and REPEATED, can appear only at the 01-level. The special-purpose clauses are:

| | |
|---|---|
| **TYPE** | indicates the type of group |
| **NEXT GROUP** | creates extra space between groups |
| **GROUP LIMIT** | gives a special lower limit for the group |
| **REPEATED** | places groups side-by-side |
| **LINE** | gives the vertical position |
| **MULTIPLE PAGE** | enables a report group to span several pages |
| **COLUMN** | gives the horizontal position |
| **SOURCE** | used to capture a data field by name |
| **SUM** | used to produce a total |
| **COUNT** | used to produce a count |
| **FUNCTION** | invokes a special formatting routine |
| **WRAP** | allows data to continue on a new line |
| **VARYING** | provides counters for a repeating entry |
| **STYLE** | produces special printer effects |
| **PRESENT/ABSENT WHEN/AFTER** | controls whether or not an item, line or group is output |
| **GROUP INDICATE** | an older form of PRESENT AFTER |

4. The clauses **PICTURE**, **COLUMN**, **SOURCE**, **VALUE**, **SUM**, **COUNT**, and **FUNCTION** can appear only at the *elementary* level.

5. For every entry with a **COLUMN** clause, there must be a **LINE** clause either at the **same** level as or at a **higher** level. If a given report line contains only one elementary field (and provided the entry is not a *multiple-choice* entry, see 3.18 *PRESENT WHEN clause*), you may combine the **LINE** and the **COLUMN** clauses in the same entry, for instance:

```
03   LINE 5   COL 60     VALUE "QUARTERLY REPORT".
```

There is no limit to the number of elementary fields a report line may contain. If the report line contains several elementary fields, you must code **all** the COLUMN entries within the line at a **lower** level than the LINE entry, for example:

```
03   LINE 5.
  05   COL 60          VALUE "QUARTERLY REPORT".
  05   COL 90          VALUE "1997".
```

Not all the **COLUMN** clauses within a **LINE** need be at the same level, since some or all elementary entries might be contained within non-LINE group entries; for example:

```
03   LINE 5.
  05   COL 60          VALUE "QUARTERLY REPORT".
  05   PRESENT WHEN YEAR NOT = SPACES.
    07   COL 90      VALUE "YEAR:".
    07   COL +2      PIC X(4)      SOURCE YEAR.
```

6. A **LINE** clause must **not** be subordinate to another LINE clause. (If this rule is violated, the nested LINE entries will be treated as though they were defined at the same level as the first.)

7. If a given report group contains several lines, you must give **all** the LINE entries in that group a level-number other than *01*. If the group contains only a single report line, you may code the LINE clause in the 01-level entry; for instance:

```
01  ORDER-LINE   TYPE DE   LINE + 1.
    05 ...
```

8. You may choose only one of five clauses: **SOURCE**, **VALUE**, **SUM**, **COUNT**, and **FUNCTION** to supply the contents of an elementary item automatically, bearing in mind that (a) **SOURCE** or **VALUE** can be repeated several times in a multiple-choice entry (see 3.18.5 *The Multiple-Choice Form*), and (b) SUM (see 3.23 *SUM clause*) or COUNT (see 3.6 *COUNT clause*) can be used as special operators in terms in an arithmetic expression (see 3.21 *SOURCE clause*).

9. If there is no SOURCE, VALUE, SUM/COUNT, or FUNCTION clause in an elementary item, the following conditions must be met:

   a. The entry must have a data-name (following the level-number).

   b. The entry must have a COLUMN clause.

   c. If the COLUMN clause is relative, the item must have a fixed horizontal position (that is, it must follow an item with a fixed end-column, unless it is first in the line).

   d. The item must have a PICTURE with none of the features that are unique to the REPORT SECTION (that is, "<" or ">" symbols or general insertion characters). Report writer will then expect you to fill in the report field independently with some COBOL procedural statement.

As an example, in the following case

```
05   R-PRIOR-CUST-NO        COL 20        PIC 9(7).
```

the only way this item can receive a value is through a COBOL **MOVE**, **ADD**, **ACCEPT**, or other procedural statement, which is outside the scope of report writer and is left to you. Report writer will ensure that the report field is not overwritten by any other field, so any value stored in the item **R-PRIOR-CUST-NO** will remain there and will appear whenever the enclosing group is produced.

Note that you should **not** attempt to change the value of a **group** field, such as a report line, in this way.

10. You may code the clauses of any report group entry in any order, except in the case of a *multiple-choice* entry, where each **SOURCE**, **VALUE**, or **FUNCTION** operand is immediately followed by **WHEN condition**. Details of this combination are given later (see 3.17 *PRESENT AFTER clause*).

11. However, you may code the **SUM** clause more than once in the same entry. You may also code a **SOURCE**, **VALUE**, or **FUNCTION** clause and its associated **PRESENT/ABSENT WHEN/AFTER** clause more than once in a multiple-choice entry. All other clauses may appear no more than once in an entry.

### 3.2.3 Compatibility

1. The COUNT, GROUP LIMIT, VARYING, PRESENT/ABSENT WHEN/AFTER, FUNCTION, REPEATED, MULTIPLE PAGE, STYLE, and WRAP clauses are provided by new Report Writer only.

2. Only new Report Writer allows the SIGN clause in the REPORT SECTION.

3. Only new Report Writer allows the BLANK WHEN ZERO and JUSTIFIED clauses in a group entry.

4. OS/VS and DOS/VS COBOL do not use level-numbers, apart from 01-level, to establish hierarchy and rely instead on the keywords TYPE, LINE, and COLUMN.

5. OS/VS and DOS/VS COBOL allow just three hierarchic levels within the Report Group descriptions.

6. OS/VS and DOS/VS COBOL do not permit REPORT SECTION entries to be the subject of non-Report Writer procedural statements.

## 3.3 BLANK WHEN ZERO clause

This causes a field with zero contents to be **blanked out**.

### 3.3.1

```
Format

►►──BLANK WHEN ZERO──►◄
```

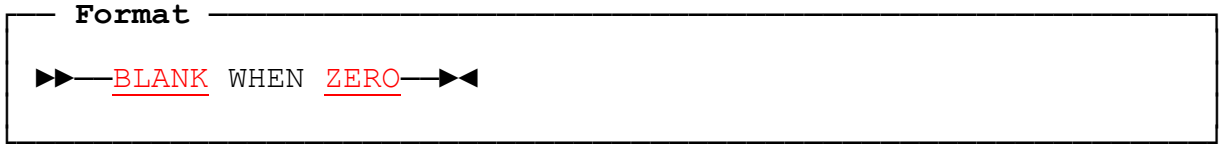

### 3.3.2 BLANK WHEN ZERO Clause: Coding Rules

If you code BLANK WHEN ZERO in an elementary entry, the entry must have a numeric PICTURE. If you code it in a group level entry, it applies to all the numeric elementary entries within the group. (This clause is usually referred to as the ***BLANK WHEN ZERO*** clause, even though the word ***WHEN*** is optional.)

### 3.3.3 BLANK WHEN ZERO Clause: Operation

BLANK WHEN ZERO causes a numeric field to be replaced entirely by spaces if its value is zero. For example:

```
 1,009.50          19.27          20.90                    160.00
                                                  ↑
```

```
05   COL 1          PIC Z,ZZZ.99       BLANK WHEN ZERO
       OCCURS 4 STEP 10 VARYING RW-X  SOURCE WS-VAL (RW-X).
```

You may use BLANK WHEN ZERO even if your field is **not** in a fixed position. It is also permitted with a variable-length field (PICTURE symbol "<"), in which case a zero value in a variable part has a length of zero.

### 3.3.4 Compatibility

Only new Report Writer allows this clause at the group as well as the elementary level.

# 3.4 COLUMN clause

The COLUMN clause specifies the horizontal positioning of a field in the report line.

### 3.4.1

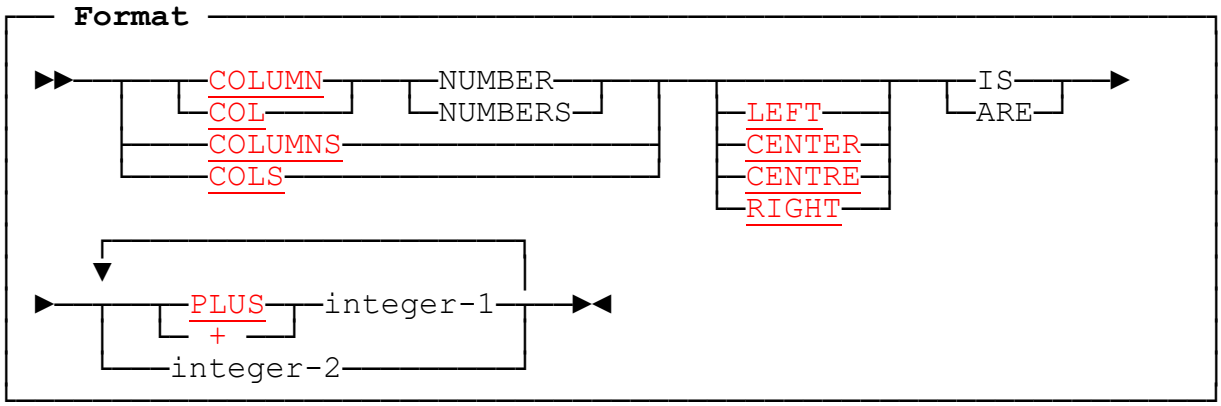


### 3.4.2 COLUMN Clause: Coding Rules

1. COLUMN with no operands is shorthand for *COLUMN + 1*.

2. For every entry with a **COLUMN** clause, there must be a **LINE** clause at the same or a higher level. So you may write:

```
05   LINE 5     COL 20          VALUE "TITLE PAGE".
```

   provided that there are **no other** entries within **LINE 5**. If the line has two or more fields, you must then create a new level, as with:

```
05   LINE 6.
  07     COL 5       VALUE "REPORT XYZ".
  07     COL 72      VALUE "ANNUAL RETURNS".
```

   If you code a **COLUMN** entry at the same level as the preceding LINE:

```
05   LINE 6   COL 5        VALUE "REPORT XYZ".
05            COL 72       VALUE "ANNUAL RETURNS".
```

   then Report Writer will diagnose this as invalid but will allow it as stated.

3. COLUMN may be the **only** clause in an entry. The result is a *blank* field whose only purpose is to shift the current horizontal position (*COLUMN-COUNTER*) to the right. A blank field (absolute or relative) occupies one column's width in addition to the usual spacing for the COLUMN. It is therefore equivalent to coding a **VALUE** consisting of a single space alongside the COLUMN clause (although doing so would be less efficient). For example, **COL + 4** coded alone in an entry shifts the current horizontal position **four** (not three) columns right. (See the discussion in the next section).

4. The size of your item is calculated from the PICTURE clause or the size of the VALUE "literal", and is used in combination with your COLUMN clause to check that: (a) the line width is not exceeded (see 2.7 *LINE LIMIT clause* and, if you are using automatic line wrap, see 3.28 *WRAP clause*), and (b) no two items overlap (unless they both carry a PRESENT AFTER clause). If two or more items overlap in whole or in part, *report writer* will diagnose this as invalid but will allow the COLUMN positions and field sizes as coded. The later-coded entry will then overwrite the earlier-coded entry at run time by the number of overlapping columns and data will be lost. No run time error occurs.

5. Within each LINE, any absolute COLUMN numbers should be in ascending order, after the evaluation of any PRESENT WHEN clause (see 3.18) *and any* PRESENT AFTER clause (see 3.17). If this rule is broken, *report writer* will issue a Warning (message 250) but will allow the COLUMN positions as coded.

6. The **RIGHT** and **CENTER** phrases cannot be coded with the **+** (relative) form of this clause.

7. You may write "+" with or without a space on either side.

### 3.4.3 COLUMN Clause: Operation

1. The COLUMN clause positions your elementary field horizontally. Here is a list of the options:

   a. **COLUMN + integer-1**. This is the *relative* form. It indicates that the horizontal position within the line is to be moved *integer* column positions from the **last** character of the preceding field to the **first** character of this field. Note that the "*gap*" before the field will be **one less** than the value of the integer. For example:

      **COLUMN + 1** = "no gap"

      **COLUMN + 2** = "one space before field", and so on.

      If you use *COLUMN + integer* in the **first** field of a line, it is treated as though you had written the absolute form, *COLUMN integer-1*, since the initial value of the horizontal position is zero.

   b. **COLUMN integer-2**. This is the *absolute* form. It indicates that the **left-hand** column of the field must appear on that fixed position within the line. Remember that the **first** column in the line is **COLUMN 1**. **LINE LIMIT** is the highest possible value of integer.

   c. **COLUMNS integer-1 integer-2 ...** This is the *multiple* form of the clause. It reduces your coding effort by including several operands in the same clause. The *relative multiple form*, COLUMNS + integer, + integer ..., is also allowed and you may combine both forms in the same clause. Multiple COLUMNS are described in more detail below (see 3.4.4 *Multiple COLUMNS Clause*).

   d. **COLUMN RIGHT** and **COLUMN CENTER** are used if you wish to specify the **right-hand** or **center** position of the field as alternative *anchoring points*, to save you the effort of "counting out" the length of the field to establish its left-hand column when you already know its center point or right-hand column. **COLUMN LEFT**, the normal alignment, is provided for syntactic completeness.

If you specify **COLUMN CENTER** and the field is an **even** number of column positions wide, the extra character position goes to the **right** of the central column. The following example shows the allowable alternatives for a six-character field starting in column 1:

```
                 LONDON
                 ↑  ↑   ↑
COLUMN  1          |   COLUMN RIGHT 6
                   └─  COLUMN CENTER 3
```

You will get a **ragged left-hand** side in the case of **COLUMN RIGHT** and centralization with **ragged left and right** , in the case of **COLUMN CENTER**. By successively generating the following entry on different lines with different values

```
05   COL RIGHT 15   PIC 9<9(6)   SOURCE POPULATION-COUNT.
```

you will obtain

```
                    1
                  234
                56789
              8765432
```

↑ column right 15

The following, generated several times with a different CITY:

```
05  COL CENTER 20
                "LONDON"                  WHEN CITY = "L"
                "BATH"                    WHEN CITY = "B"
                "GLASGOW"                 WHEN CITY = "G"
                "KINGSTON UPON HULL"      WHEN CITY = "H".
```

gives you, for example,

```
                LONDON
                 BATH
               GLASGOW
          KINGSTON UPON HULL
```

↑ column center 20

Note that RIGHT and CENTER may also be used with the *multiple* format of the COLUMN clause discussed in 3.4.4 *Multiple COLUMNS Clause*).

The CENTER or RIGHT option is **required** if you need to center or right-align a *variable-length* field - (see "<" *and* ">" *symbols*) for full details. The output in the box above could also have been produced using a SOURCE item thus:

```
05   COL CENTER 20     PIC <X(20)   SOURCE CITY-NAME.
```

2. If an elementary item has **no COLUMN** clause then, if the *OSVS* precompiler option is in effect or a data-name is present, the item will **not** appear in the report. It is then termed an *unprintable item*. Unprintable items are used chiefly for summing in the following cases:

   a. For *Subtotalling and SOURCE SUM Correlation* (see 3.23.5). A SOURCE clause may be written as an unprintable item because a SUM of a certain data item is required but its individual values are not:

```
01  DUMMY-DETAIL          TYPE DE.
    05   PIC 9(6)         SOURCE IS WS-PAY.     *> unprintable
01   TYPE CF ...
  03   LINE ...
    05   COL 22           PIC Z(6)9    SUM WS-PAY.
```

   b. For *rolling forward* of certain values into totals. This is *report writer* principal way of forming totals. This time the unprintable item has a data-name and the data-name is summed:

```
      01  DUMMY-DETAIL      TYPE DE.
          05   R-PAY            PIC 9(6)      SOURCE IS WS-PAY.
      01  TYPE CF ...
        03   LINE ...
          05   COL 22           PIC Z(6)9     SUM OF R-PAY.
```

   c. For forming totals that are not printed **directly** but used **indirectly**:

```
      01  TYPE CF ...
          05   R-PAY          PIC 9(7)     SUM OF WS-PAY.
          05   R-TAX          PIC 9(7)     SUM OF WS-TAX.
          05   COL 22         PIC Z(6)9    SOURCE R-PAY - R-TAX.
```

   Further examples may be found in *SUM Clause*.

3. If the precompiler option *OSVS* is **not** in effect, and any elementary entry beneath the LINE level has **no COLUMN clause**, then **COLUMN + 1** is **assumed** for the entry, **provided that the level-number is not followed by a data-name**. Thus, you could omit **both** COLUMN clauses in the following fragment:

```
          05   LINE 1.
            07   COL 1        VALUE "REPORT ".
            07   COL 8        PIC XXX      SOURCE REPORT-IDENT.
```

### 3.4.4 Multiple COLUMNS Clause

You may use the *multiple* form of the COLUMN clause by placing several *integer* or + *integer* terms after the keyword. This reduces the effort needed to code several adjacent entries that have a similar format. Note the following points:

1. A multiple COLUMNS clause is functionally equivalent to an ordinary COLUMN clause used in conjunction with an OCCURS clause (see 3.14); for example:

   a. You may use *VARYING* to vary a counter that is used as a subscript in a SOURCE clause.

b. You may use a simple (single-operand) **VALUE**, **SOURCE**, **SUM**, or **FUNCTION** clause to place the **same** value repeatedly in **each** instance of the field.

c. You may use a **multiple VALUE** or **SOURCE** clause to place a **different** value in each instance of the field.

d. You may place a *data-name* at the start of the entry and **SUM** the data-name in another entry to produce a total of the instances or occurrences **collectively or individually**. (To form individual totals, there must be another multiple or *occurring* COLUMN clause in the entry with the SUM clause.)

2. Unlike the method of repetition using the OCCURS clause, the intervals between the entries defined by a multiple COLUMNS clause **need not be regular**.

3. Your multiple COLUMNS clause will be syntactically correct if it would be correct when written as a series of separate COLUMN entries.

4. Here are some examples of the multiple COLUMNS clause:

```
*This places the literal in all 3 column positions:
     05   COLS 9 21 36     VALUE "-------".

*This gives you WVAL (1) WVAL (2) and WVAL (3) in the 3
*right-hand positions:
     05   COLUMNS RIGHT 21 31 42     PIC ZZZZ9
          VARYING R-SUB           SOURCE WVAL (R-SUB).

*This illustrates the combining of absolute and relative positions:
          05   COLUMN NUMBERS ARE 6 +3 +3 ...
```

5. The following diagram and corresponding code illustrates the usefulness of the multiple COLUMNS clause:

```
                    SPORTS EQUIPMENT COMPANY: WAGES SUMMARY
AREA           BASIC PAY           OVERTIME          COMMISSION          TOTAL

NORTH         $1,420,000           $600,000            $150,500         $2,170,500
EAST          $2,100,000           $850,000            $220,000         $3,170,000
```

```
01   TYPE PH.
  03   LINE 1   COL CENTER 28   "SPORTS EQUIPMENT COMPANY: WAGES SUMMARY".
  03   LINE 2   COLS RIGHT 4 19 33 47 62     VALUES
                "AREA" "BASIC PAY" "OVERTIME" "COMMISSION" "TOTAL       ".
  03   LINE 4   OCCURS 4              STEP 1          VARYING AREA-NO.
    05          COL 1                 "NORTH" "EAST" "SOUTH" "WEST".
    05   R-PAY  COLS RIGHT 19 33 47   PIC $$$,$$$,$$9       SOURCES
                BASIC-PAY   OVERTIME  TAX.
    05          COL RIGHT 62          PIC $,$$$,$$$,$$9   SUM OF R-PAY.
```

### 3.4.5 Compatibility

Only new Report Writer has the following features:

- Abbreviation of keyword as COL,
- Relative form (+ or PLUS),
- CENTER and RIGHT options,
- Multiple format,
- Blank entry when COLUMN clause present alone.

# 3.5 COLUMN-COUNTER

COLUMN-COUNTER is a *special register* that, at any given instant, contains the value of the **rightmost column number** of the most recently processed report field.

## 3.5.1

**Format**

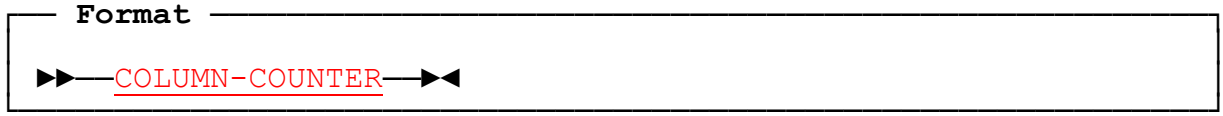


## 3.5.2 Use of COLUMN-COUNTER

1. COLUMN-COUNTER indicates the current *horizontal position* within a line. At each stage during the processing of a line, it contains the most recent rightmost column number on which data was placed in the line. It may also be incremented by an "empty" (*unprintable*) entry containing only a **COLUMN** clause. Regardless of the number of reports and report lines it contains, each program has just **one** COLUMN-COUNTER.

2. Report writer uses COLUMN-COUNTER as a *place-keeper* and internal subscript while assembling variable-length or variable-position fields in a report line. For the sake of efficiency, it does not initialize or update COLUMN-COUNTER in a report line consisting of fixed-length, fixed-position fields, unless you explicitly refer to it in an item in the line.

3. You may use COLUMN-COUNTER in the condition of a PRESENT WHEN clause (see 3.18), or as the operand of a SOURCE clause (see 3.21), or as a parameter to a **FUNCTION** (3.7 *FUNCTION clause*). It cannot be used in your **PROCEDURE DIVISION**, because the generating of each line is an indivisible operation.

4. COLUMN-COUNTER may be used to simplify the conditions that would otherwise be required to string together a series of conditional fields:

```
05  COL 30.
05  COL + 1   "A"     PRESENT WHEN A-FLAG = "Y".
05  PRESENT WHEN B-FLAG = "Y".
  07  COL + 1   ","   PRESENT WHEN COLUMN-COUNTER > 30.
  07  COL + 1   "B".
```

5. If your current group is a *REPEATED* group (see 3.19 *REPEATED clause*), or if you use the **SET COLUMN** statement of the Page Buffer feature (see 4.4 *Report Writer SET statements*), you should bear in mind that COLUMN-COUNTER is **relative** to the left-hand boundary of the group. So it does **not** include the extra left-hand margin used to offset your REPEATED groups or the extra margin you create with SET COLUMN.

6. COLUMN-COUNTER should not be used in a condition where the field is to be totalled using the SUM clause, because COLUMN-COUNTER is not updated when totalling is performed at the start of processing for the group.

## 3.5.3 Compatibility

COLUMN-COUNTER is unique to new Report Writer.

## 3.6 COUNT clause

The COUNT clause **counts the number of appearances** of any specified report field or group item.

### 3.6.1

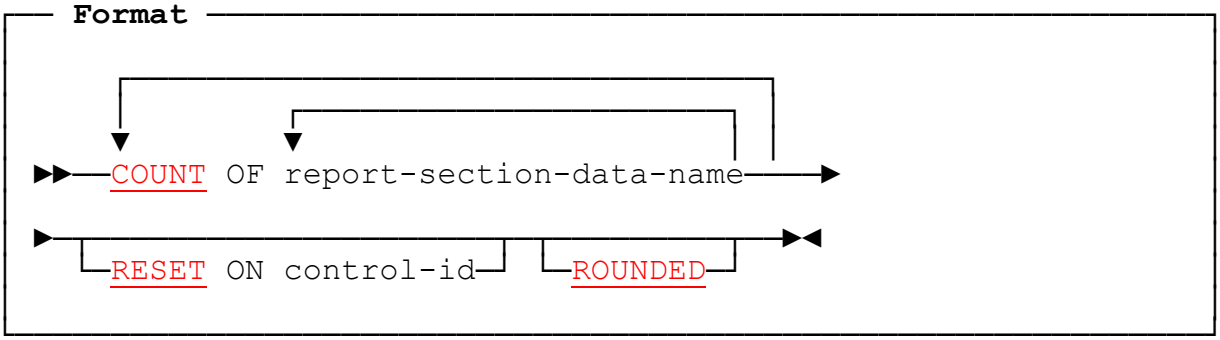


### 3.6.2 COUNT Clause: Coding Rules

1. Each *data-name* must be the name of any REPORT SECTION entry other than an *RD*. It may even be the data-name of a group entry that contains the COUNT clause.

2. You may place the COUNT clause in a different report group from the item counted (rolling forward) or in the same group (cross-footing). As with the SUM clause, if the COUNT clause appears in a *multiple CONTROL FOOTING*, all but the **lowest** level total is formed by *rolling forward* the next-lower total.

3. Unlike the situation with the SUM clause, the item counted need not be a numeric field.

4. Like the SUM clause, you may use the COUNT clause in two ways:

   a. **As a clause in its own right**. You write the clause in place of a SOURCE, VALUE, or FUNCTION clause. For example:

```
05   COL 21   PIC ZZZ9   COUNT OF R-CUSTOMER-NAME.
```

   b. As a **term in an expression** used as a SOURCE operand; for example:

```
05  COL 21  PIC ZZ9  SOURCE IS (COUNT OF R-GAIN) - (COUNT OF R-LOSS).
```

5. You may combine SUM and COUNT terms in the same expression. For example, the following will give you the *average* value of all the instances of a numeric field:

```
05  COL 32   PIC ZZZZ9
    SOURCE (SUM OF PURCHASE) / (COUNT OF PURCHASE)   ROUNDED.
```

### 3.6.3 COUNT Clause: Operation

1. This clause gives a *count* of the number of times the item referenced has appeared. In other words, whenever the item appears in the Report, *1* is added to the count. You cannot count items that are outside the REPORT SECTION, such as WORKING-STORAGE items.

2. The item referenced may be at **any level**; for example:

   a. A *01*-level entry: you will obtain the number of appearances of a particular group.

   b. A **LINE** entry: you will count the number of appearances of that particular LINE.

   c. A **COLUMN** entry: you will obtain a count of appearances of that particular elementary item.

3. Assuming that you do not use the **RESET** phrase, when your COUNT field has been output the *count* returns to zero. Hence, you will always obtain the count of the number of appearances of the item since the last time the count was output.

4. You may use the **RESET ON** phrase to delay the resetting of the count to zero until a higher-level control break occurs, in exactly the same way as you can with the SUM clause.

5. If the item counted is one that repeats several times because of an **OCCURS** or **REPEATED** clause, the count will include each repetition. An **OCCURS ... DEPENDING** will count just the number of items actually output. A **PRESENT** clause (or the equivalent) is also taken into account, so that items "not present" do not contribute to the count.

6. You may count more than one item by writing more than one data-name as an operand in the clause. The counts are then simply consolidated internally.

   (The COUNT clause is really a special variant of the SUM clause, so other points of interest can be found under 3.23 *SUM clause*.)

### 3.6.4 Compatibility

Only new Report Writer provides the COUNT clause.

## 3.7 FUNCTION clause

The FUNCTION clause invokes a **special routine** to reformat or convert the data before it appears in your report field.

### 3.7.1

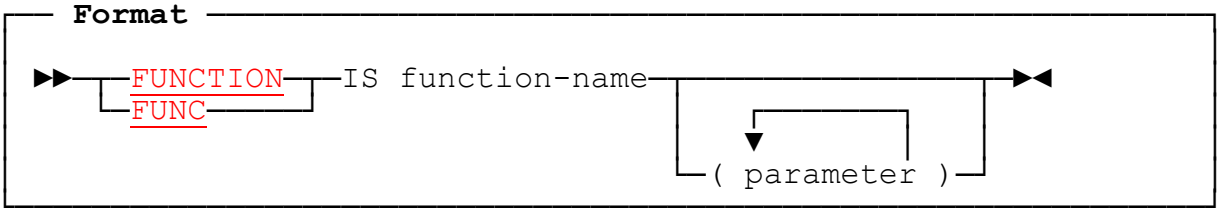


### 3.7.2 FUNCTION Clause: Coding Rules

1. *Function-name* must be alphanumeric and must be either a standard supplied function name or a user-written one. It may begin with a numeric character. A full list of standard function names is given below, and you or any other person may add new ones to the list at any time.

2. The FUNCTION clause may be used only at the elementary level, in place of **SOURCE**, **SUM**, or **VALUE**. It is permissible for the entry to have no COLUMN or PICTURE clause, i.e. the entry may be a *dummy*. You may use it in a multiple-choice entry, if so desired.

3. The number of parameters you need, if any, and their formats are stated below (see 3.7.4 *Built-In Functions*) for each **built-in** function. **User-written** functions should also have a description that tells you this information. Some functions take no parameters while others allow either a fixed or a variable number.

4. Each *parameter* may be any **identifier**. It may also be an **integer**, **literal**, or **arithmetic expression**, for example:

```
FUNCTION DAYSIN (SALES-DATE + 365).
```

   in which case the parameter is given to the Function routine as a one-word signed binary field. You cannot use **SUM** or **COUNT** terms in the expression. Neither can you use **LENGTH OF**, **ADDRESS OF**, **BY CONTENT**, or **BY REFERENCE**, as part of a parameter.

5. The FUNCTION keyword may also be used in the format **FUNCTION IS function-name (...)** in a SOURCE clause or in a condition in a PRESENT WHEN clause. In such cases *function-name* is a COBOL *intrinsic function* and is not part of the FUNCTION clause described here.

### 3.7.3 FUNCTION Clause: Operation

1. The function routine behaves like a subroutine whose parameters consist of the parameters specified in the FUNCTION clause, if any, together with information about the size of the report field, if any, and the report field's contents, both of which are automatically supplied by report writer. Details on the linkage to function routines are given later (see 5.2 *Developing User-Written Functions*).

2. If you code an **edited** PICTURE (numeric or alphanumeric) with the FUNCTION clause, report writer invokes the function routine using an internal intermediate field that has the **unedited** equivalent of your PICTURE. This is obtained by removing all insertion characters, including any decimal point. Also any "Z" or "*" symbol or floating sign or currency symbols are converted to an equivalent number of "9" symbols. The "<" symbol is also removed. For example, if your entry is as follows:

```
05  COL 21     PIC $$,$$9.<99     FUNCTION MONEY (WS-VAL).
```

   Report writer will provide the function routine with an intermediate field with a PICTURE of 9999V99 as a parameter for receiving the output value. Report writer then executes a *MOVE* from the intermediate field to your original report field. This means that all functions, including user-written ones, can operate with edited report fields, without function routine developers needing to allow for the many possible edited formats.

3. One of the parameters report writer passes to the function routine is the size in bytes of the report field, if any, to be output. If the PICTURE is edited, this size is the size of the **intermediate** field. Using the case given in the previous paragraph, for instance, the function routine will be told that the size is **6**. The Function routine may decide to produce different formats for the output report field, depending on the number of bytes implied by this size. It may also simply truncate the output value (on the left or the right) down to the number of characters required. This can give you freedom to choose from many possible PICTUREs to use with a function. For example, if MDATE is used, and today's date is 5th January, 1997:

| | |
|---|---|
| **PICTURE 9(6)** will give you: | 010597 |
| **PICTURE 99/99/99** will give you: | 01/05/97 |
| **PICTURE XXXB99B9(4)** will give you: | JAN 05 1997 |
| **PICTURE <X(9)B<99B9999** will give you: | JANUARY 05 1997 |

   Functions cannot detect the kind of PICTURE symbols used. For example PICTURE **XXBXXBXX** produces the same result as PICTURE **99B99B99**.

4. The clause **SOURCE IS CURRENT-DATE** behaves operatinally like an implicit "Function", since it invokes a run time routine.

### 3.7.4 Built-In Functions

The following is a list of the built-in functions.

**CTIME** (*Clock Time*) is similar to **TIME** (see below) except that it uses the 12-hour clock and prints either AM or PM (or blanks at midnight (0.00) and noon (12.00)). The (unedited) PICTURE should therefore allow for two additional non-numeric characters. For example, **PIC 99":"99BXX** could result in **11:30 PM**.

**DATE** (*European Date*) returns a date in any one of a number of display formats in the order **day/month/year**. The date **does not change** after the first invocation of the function.

Number of parameters: 0 or 1.

If no parameter is supplied, the date will be the current date at the start of the run. If one parameter is supplied, it must be either a 7-digit date held in a **PIC S9(7) COMP-3** (packed) format in the form **ccyyddds** (**s** = sign), or a 5-digit date held in a **PIC S9(5) COMP-3** (packed) format in the form **yyddds** (in which case the current century is assumed).

```
Report-field (PIC) lengths (excluding editing symbols):
  5  -  yyddd
  6  -  ddmmyy
  7  -  ddMMMyy        (MMM is first 3 characters of month name)
  8  -  ddmmccyy       (cc is century)
  9  -  ddMMMccyy
 13  -  ddM(9)yy       (M(9) is 9-character month name)
 15  -  ddM(9)ccyy
```

**DAY** (*Day-of-Week*) returns the alphabetic day-of-the-week represented by the given date.

Number of parameters: 0 or 1.

If no parameter supplied, the **current date** is used. If one parameter is supplied, it may be either a 7-digit date held in a **PIC S9(7) COMP-3** (packed) format in the form **ccyyddds** (**s** = sign), or a 5-digit date held in a **PIC S9(5) COMP-3** (packed) format in the form **yyddds** (when the current century is assumed), or a two- or four-byte (PIC S9(9) COMP or PIC S9(4) COMP) location containing a value from 1 (= Monday) to 7 (= Sunday), or a one-byte (PIC 9 DISPLAY) location containing a value from 1 to 7.

```
Report-field lengths (excluding editing symbols):
  3 - first 3 letters of day (MON,TUE,WED,THU,FRI,SAT,SUN)
  9 - full name of day
```

**DAYSIN**(*Days Elapsed Since Base Date*) converts a binary number of days since January 1st, 1601 to a date in the same format as for DATE. This function is identical to MDAYS, except that the date is returned in the order: day/month/year.

**MDATE** (*US Date*) returns a date in any one of a number of display formats in the order **month/day/year**. It is similar to the **DATE** function, except that the day and month fields are reversed.

```
Report-field lengths (excluding editing symbols):
  5  -  yyddd
  6  -  mmddyy
  7  -  MMMddyy     (MMM is first 3 characters of month name)
  8  -  mmddccyy    (cc is century)
  9  -  MMMddccyy
 13  -  M(9)ddyy    (M(9) is a 9-character month name)
 15  -  M(9)ddccyy
```

**MDAYS** (*Days Elapsed - US Format*) converts a binary number of days since the Codasyl/ANSI standard base date of January 1st, 1601 to a date in the same format as **MDATE**, that is, month/day/year. See MDATE above for more information on report field lengths.

Number of parameters: 1.

The parameter must be the number of days since January 1st 1601 inclusive, held as one fullword binary (such as PIC S9(9) COMP). This is the *base date*, 584,693 days since absolute year zero (ignoring calendar reforms). A zero value means December 31 1600. A negative value gives a date before December 31 1600. You may change the base date by re-compiling the source of the FUNCTION supplied with this product, in which case your new function should have a different name to avoid incompatibility.

**MONTH** (*Month Name*) returns an alphabetic month name.

not VSE

Number of parameters: 0 or 1

If no parameter is supplied, the current month is returned. If a parameter is supplied, it should be either a 7-digit date held in a **PIC S9(7) COMP-3** (packed) format in the form **ccyyddds** (**s** = sign), or a 5-digit date held in a **PIC S9(5) COMP-3** (packed) format in the form **yyddds** (when the current century is assumed), or a two-byte (PIC 99 DISPLAY) location containing a value from 01 to 12, or a four-byte binary (PIC S9(9) COMP) location containing a value from 1 to 12.

```
Report-field lengths (excluding editing symbols):
  3  -  first three characters of month (JAN,FEB,MAR,etc.)
  9   -   full name of month
```

**MOVE** (*Save Register*) copies any report writer special register to a specified working location. This is a **dummy** function which requires no report field and may be coded without a COLUMN or PICTURE clause. (If the entry is not a dummy, the field will be space-filled.)

Number of parameters: 2.

Parameter 1 is any numeric special register, typically *LINE-COUNTER* or *COLUMN-COUNTER*. It may also be a user-defined data-name specified in a VARYING clause.

Parameter 2 is any half-word binary location (PIC S9(4) COMP) to receive the contents of parameter 1.

This FUNCTION is used to capture *on the fly* the contents of a register whose value is constantly changing. The following sample code prints up to 12 monthly payments to print side-by-side showing only those which are not zero and, by storing each value of the VARYING subscript R-MONTH in LAST-MONTH for those occurrences selected, it is able to state which month was the **last** to be printed.

```
03  LINE.
  05 OCCURS 12 VARYING  R-MONTH PRESENT WHEN PAY (R-MONTH) > 0.
    07  COL + 3           PIC ZZZZ9 SOURCE PAY (R-MONTH).
    07                    FUNC MOVE (R-MONTH LAST-MONTH).
  05  COL 90              "Last month with a payment was".
  05  COL + 2  PIC X(9)   FUNC MONTH (LAST-MONTH).
```

**RDATE** (*Real DATE*) is similar to **DATE** without the optional parameter, except that the current date is always fetched. Compare RMDATE.

**RMDATE** (*Real MDATE*) is similar to **MDATE** without the optional parameter, except that, if the date changes during the run, because the time passes through midnight (00:00:00), the date **is** changed.

```
Report-field (PIC) lengths (excluding editing symbols):
   5  -  yyddd
   6  -  yymmdd
   7  -  yyMMMdd     (MMM is first 3 characters of month name)
   8  -  ccyymmdd    (cc is century)
   9  -  ccyyMMMdd
  13  -  yyM(9)dd    (M(9) is 9-character month name)
  15  -  ccyyM(9)dd
```

**RYDATE**(*Real YDATE*) is similar to **YDATE** (see below) without the optional parameter, except that the current date is always fetched. Compare RMDATE.

**STATE** (*US State*) returns the name of one of the US states, plus "DC".

Number of parameters: 1

The parameter may be either a state number with PICTURE 99 (DISPLAY) ranging from 01 (ALABAMA) to 51 (WYOMING), in alphabetical order of their full names, or a two-character standard abbreviation e.g. "AL" or "WY".

The report-field length must be at least 14. If it is less than 20, then *DISTRICT OF COLUMBIA* is rendered as **D.C.**

**STATEF** (*US State or Territory*) is similar to **STATE** (see above) except that the five overseas territories are included, merged into the set of 51 domestic states, in alphabetical order of their full names.

**STIME** (*Static Time*) is similar to **TIME** (see below) except that the time is only fetched initially from the operating system and therefore does not change in value throughout the program.

**TIME** (*Run Time*) returns the current time in format **hhmmsstt**, where tt is hundredths of a second, if available, otherwise zeros. The value of the time may change on each invocation of the function.

Number of parameters: none

```
Report-field (PIC) lengths:
   4  -  hhmm
   6  -  hhmmss
   8  -  hhmmsstt
```

As an example, the following example uses DAY, DATE, and TIME:

```
05   COL 31   PIC <X(9)              FUNC DAY.
05   COL +2   PIC <99/<99/9(4)       FUNC MDATE.
05   COL 51   PIC 99,99,99           FUNC TIME.
```

executed at 3 PM on March 7th, 1997 will result in:

```
FRIDAY 3/7/1997          15,00,00
```

**YDATE** (*Date Reversed*) returns a date in any one of a number of display formats in the order **year/month/day**. Apart from this order, it is similar to DATE and MDATE.

**ZIP** (*Zip Code*) prints a standard US or Canadian *ZIP code*.

Number of parameters: 1.

The single parameter must contain the ZIP code in the format S9(9) COMP-3. This is then output in the form nnnnn-nnnn, but the final -nnnn is left blank if the last four digits are 9999.

### 3.7.5 Compatibility

Only new Report Writer provides FUNCTION as an independent clause.

# 3.8 GROUP LIMIT clause

This clause explicitly gives the **lowest permissible vertical position** for any line in a specific body group.

**Format**

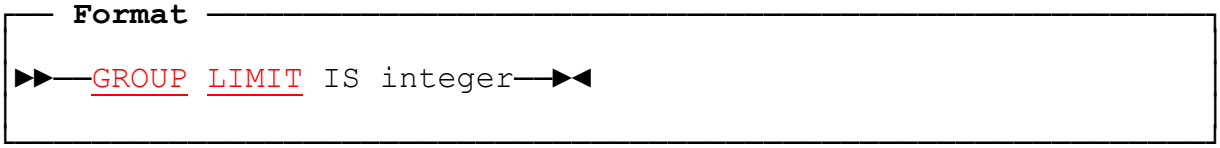


## 3.8.1 GROUP LIMIT Clause: Coding Rules

1. Your *integer* must not be greater than the lower limit (LAST DETAIL, LAST CONTROL FOOTING, or PAGE LIMIT) that would normally apply without the clause (see 2.9 *PAGE LIMIT clause*).

2. Code this clause only at the *01*-level in a body group (DETAIL or CH/CF).

3. Your group's first LINE clause must be **relative**.

## 3.8.2 GROUP LIMIT Clause: Operation

1. When doing the page-fit test, report writer will use your integer as the bottom line number, beneath which no part of the group may appear, instead of the usual end-of-region values (see *PAGE LIMIT clause*).

2. This clause is especially useful in a **CONTROL HEADING**, which might appear misplaced if it appeared near the bottom of the page like the DETAIL and CONTROL FOOTING groups.

## 3.8.3 Compatibility

The GROUP LIMIT clause is unique to new Report Writer.

## 3.9 JUSTIFIED clause

This clause causes a SOURCE, SUM, COUNT, VALUE, or FUNCTION clause whose operand is shorter or longer than the target report field to fill the report field with excess spaces, or perform truncation, on the left instead of the right.

### 3.9.1

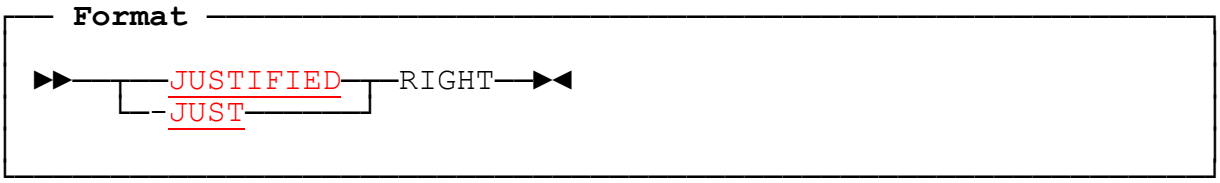


### 3.9.2 JUSTIFIED Clause: Coding Rules

1. If you code JUSTIFIED RIGHT in an elementary entry, the entry must have an **alphanumeric** PICTURE.

2. This clause acts on elementary-level fields, but you may also code it in a group-level entry, including *01*, where it applies to all the alphanumeric elementary entries in the group.

### 3.9.3 JUSTIFIED Clause: Operation

1. The JUSTIFIED clause is retained for compatibility with ANS COBOL and acts on an elementary field in the same way as in basic COBOL. It cannot be used for *right-flushing* variable-length fields, for which **COLUMN RIGHT** should be used. (See 3.4 *COLUMN clause*.) This is because JUSTIFIED does not consider the **contents** of the sending field.

2. The JUSTIFIED clause takes effect when your alphanumeric SOURCE field is of a different size from the PICTURE. The *padding out* with spaces or the truncation (if the PICTURE is smaller than the field) then takes place on the **left** instead of the right. In the following example, we want to output either MONTH-NUMBER (2 characters) in columns 12 and 13 or YEAR-NUMBER (4 characters) in columns 10 through 13:

```
05   COL 10   PIC X(4) JUSTIFIED RIGHT
              SOURCE MONTH-NUMBER WHEN MONTH-IND = 1
              YEAR-NUMBER WHEN OTHER.
```

### 3.9.4 Compatibility

OS/VS and DOS/VS COBOL allow this clause only in elementary entries, but in all other respects new Report Writer and the older compilers treat it identically.

# 3.10 LINE clause

The LINE clause positions a line vertically on the page.

## 3.10.1

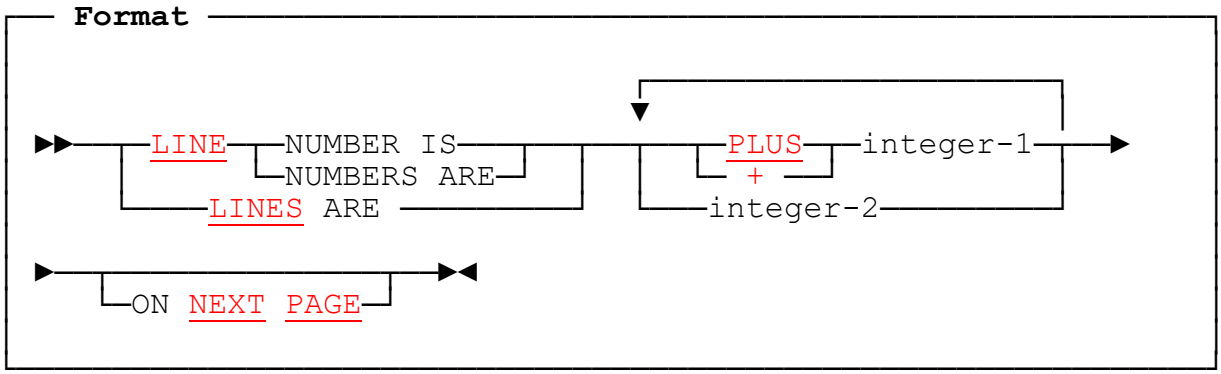


## 3.10.2 LINE Clause: Coding Rules

1. Here is a list of the alternative forms:

   a. **LINE + integer-1**. This is the *relative* form. **PLUS** may be written in place of **+**. It indicates that the line should advance *integer* lines from the previous position. **LINE + 0** or **LINE + ZERO** is allowed, indicating that **no** advance is to take place. The result is that the line overprints the previous line. You may write "+" with or without a space on either side.

   b. **LINE integer-2**. This is the *absolute* form. It indicates that the line will appear on that fixed position on the page. The first line on the logical page is LINE 1, corresponding to position reached on issuing a form feed. The highest line number allowed is given by the PAGE LIMIT operand. This absolute form is allowed only if you have a PAGE LIMIT clause in your RD.

   c. **LINE integer-2 ON NEXT PAGE**. This is similar to *format b* but the **ON NEXT PAGE** phrase forces a page advance to occur before the line is output, irrespective of whether the group containing it would fit on the current page.

   d. **LINE ON NEXT PAGE** forces the line to be output in the FIRST DETAIL position on the next page (for a body group) or the HEADING position (for a REPORT HEADING or REPORT FOOTING group).

   e. **LINES ARE integer-1 integer-2 ...** is the *multiple* form of the clause. It enables you to save coding effort by describing several lines in the same clause. You may also write LINES **+** *integer*, **+** *integer* etc (the relative form) and may combine both forms in the same clause. You may also write **ON NEXT PAGE** after the last operand, in which case this phrase applies to the first line in the set.

2. LINE alone is shorthand for **LINE + 1**.

3. The **first** LINE clause in each group determines whether the group as a whole is to be **relative** or **absolute**. If the first LINE clause is **relative**, the group is a **relative** group and **all the other LINE clauses must be relative**. So the entire group can be positioned anywhere on the page, within the permitted upper and lower limits for the group:

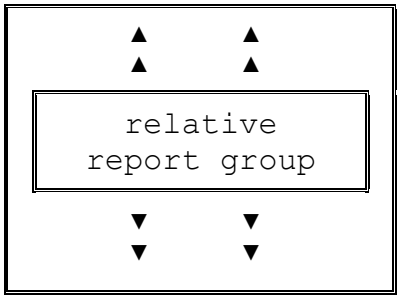


If the first LINE clause is **absolute**, the group is an **absolute** group and any of the remaining LINE clauses may be **absolute or relative** . For example, the following two arrangements of LINE clauses within a group are equivalent:

```
01   TYPE PH.                    01   TYPE PH.
  03   LINE 1. ...                 03   LINE 1. ...
  03   LINE 2. ...                 03   LINE + 1. ...
  03   LINE 4. ...                 03   LINE + 2. ...
```

Using relative lines has the advantage that you can adjust the position of the entire group by changing just the first LINE number.

4. If a group has absolute LINE clauses, except where NEXT PAGE is used, the integers must be in **increasing** order. Except in the case of LINE + 0, no lines may overlap. (If you place *PRESENT WHEN condition* clauses on the LINE entries, then **mutually exclusive** lines may have the same line numbers. See 3.18 *PRESENT WHEN clause*.)

5. A LINE need not contain any COLUMN entries (whether actual or implied by default). The result is a **blank** line containing no data. For example:

```
01  TYPE PH.
    05   LINE   2     VALUE "** HEADING **".
    05   LINE   4.                    *> (or LINE + 2.)
```

This causes the PAGE HEADING to occupy lines 2 to 4, although data is written only on line 2.

6. One LINE clause must **not** be **subordinate** to another LINE clause. If this rule is broken, a warning message will be issued and the previous line will be terminated; for example:

```
01   PAYMENT-LINES     LINE NEXT PAGE.
  03   COLUMN 1   ...
  03   LINE PLUS 1.
    05   COLUMN 1   ...
```

7. The **ON NEXT PAGE** phrase may be coded only in the **first** LINE clause of a report group, except when the report group entry has a *MULTIPLE PAGE* clause (or when this is assumed, as in the case of REPORT HEADING and REPORT FOOTING) where there is no restriction. (See 3.12 *MULTIPLE PAGE clause*.) This permits such groups to occupy several pages.

### 3.10.3 LINE Clause: Operation

1. If a group is absolute, its first LINE clause indicates the starting position of the group (see rule 3 above). The next two paragraphs cover the relative case.

2. Positioning of relative body groups (CH, DE, and CF)

   a. If the group is the **first** body group on the page, the first line of the group is positioned at the **FIRST DETAIL** position, irrespective of the *integer* of the LINE clause. If you did **not** code a FIRST DETAIL sub-clause in your RD, the first line will appear one line after the PAGE HEADING group, if there is one, or at the HEADING position if not. Subsequent lines in the group are positioned relative to each other.

   b. If the group is **not** the first body group on the page, then the first line of the group is positioned relative to LINE-COUNTER, which normally contains the last line position of the preceding body group. (But note that a NEXT GROUP clause or an alteration to the value of LINE-COUNTER in the PROCEDURE DIVISION can affect this positioning.)

3. Page-Fit Test for Body Groups

   When a report has a PAGE LIMIT clause, report writer performs a *page-fit test* before outputting any body group (CONTROL HEADING, DETAIL, or CONTROL FOOTING). This is to ensure that none of the lines of the group will be output unless **all** the lines of the group will fit in the region of the page reserved for its type of body group. (See 2.9.3 *PAGE LIMIT Clause: Operation*.) The type of page-fit test performed will depend on whether the group is absolute or relative. In all cases, remember that LINE-COUNTER contains the *current vertical position*, normally the position of the line last written before this group was generated.

   a. Absolute Page-Fit Test for Body Groups

      If the first LINE is **absolute**, report writer takes the first LINE number as the starting position of the group. (If any of the absolute LINE clauses are conditional, then this "first line" need not be the first LINE number coded; if all absolute lines are *ABSENT*, the group will be treated as null or relative, as the case may be.) If LINE-COUNTER is positioned at a line **above** the starting line position of the group, report writer will **not** skip to a new page. In all other cases, a page advance takes place (see item 5 below) and the group is printed at the line specified on a fresh page. The next diagram illustrates this process:

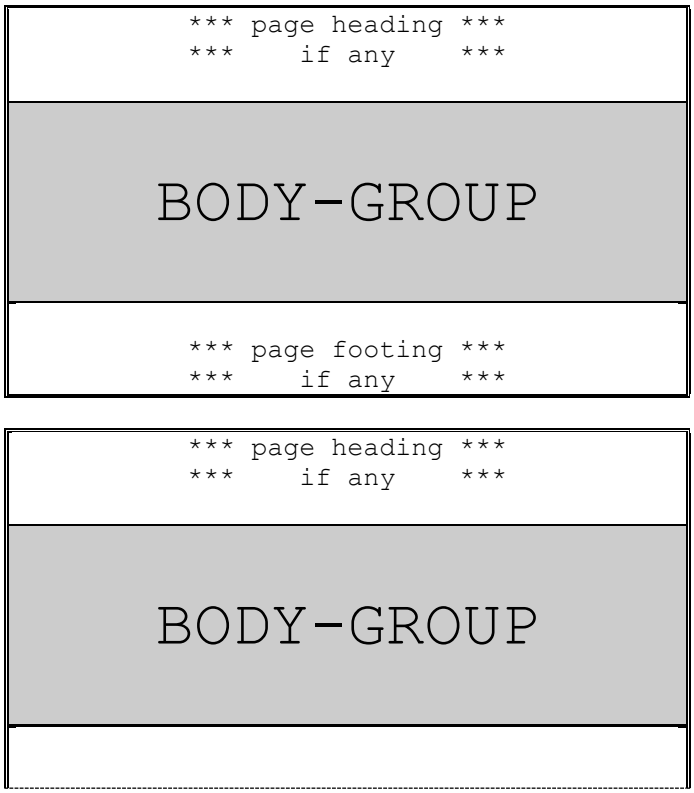


```
...  GENERATE BODY-GROUP ...

01    BODY-GROUP TYPE DE.
  03   LINE 20 ...
  03   LINE 21 ...
```

← *final LINE-COUNTER = 21*

```
...  GENERATE BODY-GROUP ...
```

*LINE-COUNTER = 21, which is > line 20; so page advances..*

*Space up to start of group (line 20) is left blank.*

b. Relative Page-Fit Test for Body Groups

When all the LINE clauses in the group are **relative**, report writer computes the total of all the integers of the *LINE* + clauses. This gives the total size of the group. If the group contains LINE entries that have a condition attached, as from a PRESENT WHEN/AFTER clause, or from an OCCURS ... DEPENDING clause, all these clauses are evaluated first, so that the actual number of lines about to be produced is known. The value *LINE-COUNTER + total-size-of-group* is the **last** line on which the group would appear if it were produced on the current page. If this last line position is beyond the lower permitted limit of the group, the group cannot fit on the page and a page advance takes place.

As shown by the diagram and rules under *PAGE LIMIT clause*, and *GROUP LIMIT clause*, the lower permitted limit of the group is given by:

- The report group's own **GROUP LIMIT** clause, if there is one, or
- The RD's **LAST DETAIL**, if the group is a DETAIL or CONTROL HEADING
- The RD's **LAST CONTROL FOOTING** if the group is a CONTROL FOOTING.

The LAST DETAIL and LAST CONTROL FOOTING sub-clauses need not be explicitly specified in your RD, as report writer will assume defaults for them, as outlined under *PAGE LIMIT Clause* (see above).

The following diagram shows an example of a page-fit test.

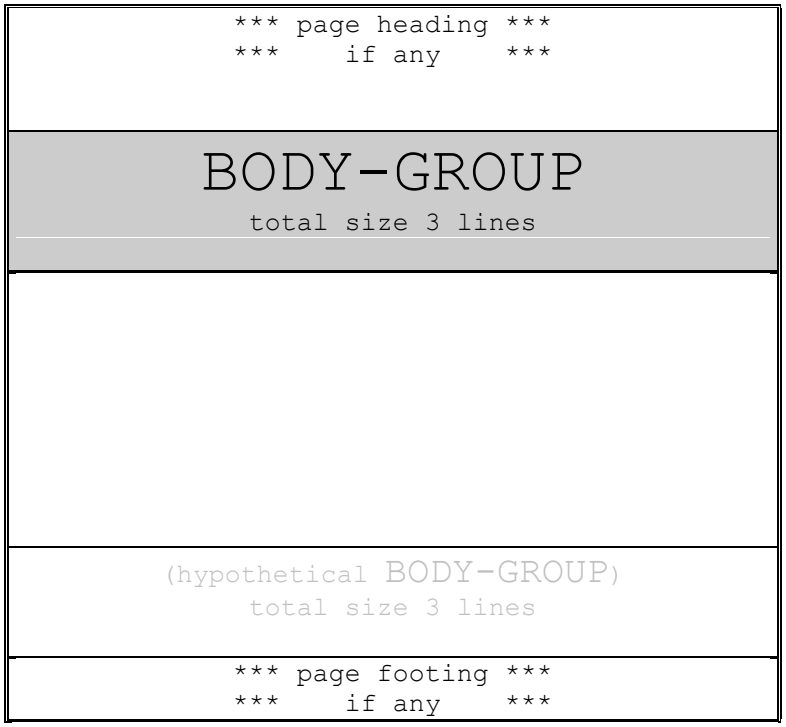


```
RD ... FIRST DETAIL 3
       LAST DETAIL 60
       PAGE LIMIT 64

... GENERATE BODY-GROUP ...

 01  BODY-GROUP TYPE DE.
   03  LINE + 2...
   03  LINE + 1...
```

*Initial LINE-COUNTER = 10;*
*10 + 3 = 13 = last LINE position;*
*13 not > 60, so **enough room**.*

*Later, on the same page:*

```
... GENERATE BODY-GROUP ...

01  BODY-GROUP TYPE DE.
   03  LINE + 2...
   03  LINE + 1...
```

*Initial LINE-COUNTER = 58;*
*58 + 3 = 61 = last LINE position;*
*61 > 60, so NOT enough room,*
*so **page advance takes place**.*

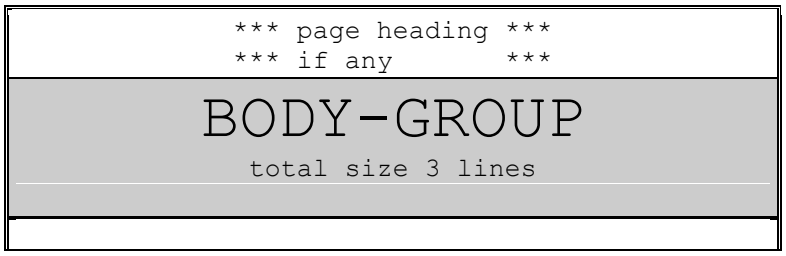


← *Second group produced at FIRST DETAIL position, line 3.*

4. Positioning of relative non-body groups (RH, PH, PF, and RF)

   a. **TYPE RH and PH**: relative to **HEADING minus 1**. (However, in the case of the first PH group when there is a RH group also on the first page, it is relative to the last line of the RH group.)

   b. **TYPE PF**: relative to **LAST CONTROL FOOTING**.

   c. **TYPE RF**: relative to **HEADING minus 1**. (However, in the case where the RF group does not begin on a new page, it is relative to the last line of the PF group, if there is one, or to LAST CONTROL FOOTING, if there is no PF group.)

5. Page advance processing

When report writer executes a page advance, it does the following:

- If you defined a **PAGE FOOTING**, this is output.
- **PAGE-COUNTER** is incremented by 1.
- An advance is made to the **top of the next page**. In "batch" printing a form feed is output, but with an *Independent Report File Handler* the action may vary (see 5.3 *Independent Report File Handlers*). **LINE-COUNTER** is then set to zero.
- If you defined a **PAGE HEADING**, this is output.

### 3.10.4 Multiple LINES Clause

By writing **several** *integer* or + *integer* terms in a LINE clause, you save time in defining a group of lines that all have a similar layout. Note the following points:

1. A multiple LINES clause is **functionally equivalent** to a **LINE** with an **OCCURS** clause; for example:

   a. You may use a **VARYING** clause to vary an internal counter that may be used as a subscript in a SOURCE clause within the scope of the LINE clause.

   b. A **simple** (single-operand) VALUE, SOURCE, SUM, or FUNCTION is **repeated** in every occurrence of the line.

   c. You may use a **multiple** VALUE or SOURCE clause to place a **different** value in a report field in each occurrence of the multiple LINE.

   d. You may place a *data-name* at the start of the entry and **SUM** it into another entry to produce a total of all the (multiple) entries.

2. However, in contrast to the OCCURS clause, the intervals between the lines defined by a multiple LINES clause **need not be regular**.

3. Your multiple LINES clause will be syntactically correct if it would be correct when written as a series of LINE clauses in separate entries.

4. Here are some examples of the multiple LINES clause:

```
a.      03  LINES 1, 3, 4.
b.      03  LINE NUMBERS ARE +2, +1, +1   COL 6  VALUE "----".
```

Here the ON NEXT PAGE phrase applies to the first of the three lines:

```
c.      03  LINES 1, +2, +2 ON NEXT PAGE.
```

5. The multiple LINES clause is useful in lines, such as headings, that have *stacked* text. Consider the following example in conjunction with the description under *Multiple SOURCES* and *Multiple VALUES*:

```
SALES                  GROSS          PAGE     1
THIS       LAST        PROFIT
YEAR       YEAR
```

It may be coded as follows:

```
 01  TYPE PH.
   03   LINES 1 2 3.
     05   COL 1      VALUES    "SALES"
                               "THIS"
                               "YEAR".
     05   COL 11     VALUES    " "
                               "LAST"
                               "YEAR".
     05   COL 21     VALUES    "GROSS"
                               "PROFIT"
                               " ".
     05   COL 35     VALUES    "PAGE"    " "    " ".
*We use a blank "literal" or SOURCE NONE
*in any occurrence that is to be empty.
     05   COL 40     PIC ZZ9   SOURCES PAGE-COUNTER, NONE, NONE.
```

Of course, you do not have to code the multiple VALUES in a "stacked" format like this, but it is suggested to aid readability.

### 3.10.5 Compatibility

- Only new Report Writer provides the following features:
- Use of **+** as alternative to PLUS,
- The multiple format,
- LINE PLUS ZERO as alternative to LINE PLUS 0,
- Blank entry with LINE clause only to provide blank line,
- Absolute LINE allowed to follow relative LINE,
- Absolute LINEs may advance to new pages within RH, RF, and body groups.

# 3.11 LINE-COUNTER

LINE-COUNTER is an internal *special register* that contains the **most recent report line number** on which data was produced, or which has been advanced to by a blank LINE clause or a NEXT GROUP clause. LINE-COUNTER may also be altered by an ordinary PROCEDURE DIVISION statement or implicitly by Report Writer SET statements.

## 3.11.1

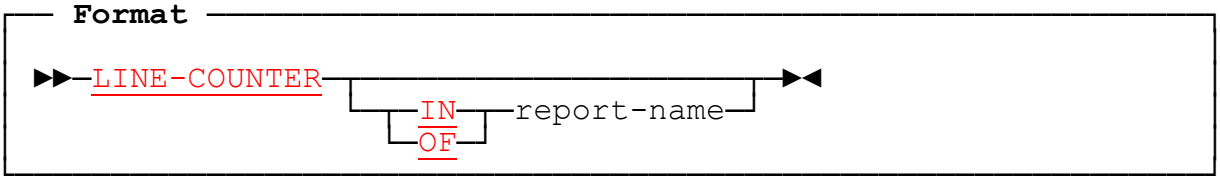


## 3.11.2 Uses of LINE-COUNTER

LINE-COUNTER is a special register giving the **current vertical position** on the page. After a **GENERATE** has been executed, LINE-COUNTER will be set to the line number of the **last** line occupied by the last group output. A NEXT GROUP may change it further (see *NEXT GROUP clause*). You can test the value of LINE-COUNTER to determine the vertical position on the current page.

Whenever you issue a GENERATE statement, report writer examines LINE-COUNTER to decide where it should output the lines of the group. It is set to zero by the **INITIATE** and by a page advance. Then, if your line has a *LINE + integer* clause, report writer uses **(LINE-COUNTER + integer)** as its target line. When the page-fit test is performed for a relative body group, report writer adds the size of your group to LINE-COUNTER to see whether the last line will be below the group's lower limit.

You may alter the value of LINE-COUNTER in the *PROCEDURE DIVISION*, but take care! **Do not reduce** the value of LINE-COUNTER, or you are liable to cause too many lines to be written to your page so that it overflows its lower limit. You may **increase** its value safely. Some legitimate reasons for altering its value are:

1. To create an additional *gap* between the previous group and the next group:

```
ADD size-of-gap TO LINE-COUNTER
```

   If your page is nearly full (so that LINE-COUNTER is nearly equal to the LAST DETAIL value) this will simply cause a page advance upon the next GENERATE instead of a gap. If your ADD statement sets LINE-COUNTER below LAST DETAIL, no harm is done. You should note that the **NEXT GROUP** clause performs this function more elegantly.

2. To cause a **page advance**, that is, to force report writer to place no more body groups on this page, code:

```
MOVE page-limit TO LINE-COUNTER
```

Again, coding the NEXT GROUP NEXT PAGE clause on the previous group also performs this function better. (See 3.13 *NEXT GROUP clause*.)

3. If your REPORT SECTION has **several** Report Descriptions, each will have its own **distinct** LINE-COUNTER. In the main-line PROCEDURE DIVISION, you will therefore need to *qualify* LINE-COUNTER by the name of the report. (See 3.15 *PAGE-COUNTER*, and 5.1 *Multiple Reports*.)

### 3.11.3 Compatibility

1. OS/VS and DOS/VS COBOL also allow LINE-COUNTER to be altered explicitly, but this does not create a gap.

2. OS/VS and DOS/VS COBOL Report Writer require LINE-COUNTER to be qualified wherever it is used if your program contains more than one RD.

## 3.12 MULTIPLE PAGE clause

This clause allows a report group to **span more than one page**.

### 3.12.1

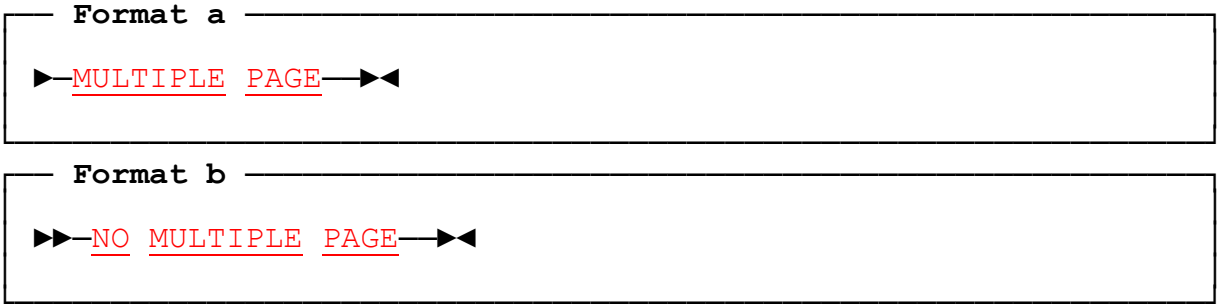


### 3.12.2 MULTIPLE PAGE Clause: Coding Rules

1. This clause can be coded in **any** type of group other than **PAGE HEADING** and **PAGE FOOTING**. The RD must have a PAGE LIMIT clause.

2. Either **MULTIPLE PAGE** or **NO MULTIPLE PAGE** may be coded at the *01* level. Alternatively, **NO MULTIPLE PAGE** may be coded on a **group** of one or more LINE entries, provided that there is a MULTIPLE PAGE at the *01* level. No other nesting is allowed.

3. By default, **NO MULTIPLE PAGE** is assumed for all body groups and **MULTIPLE PAGE** for REPORT HEADING and REPORT FOOTING groups.

4. The MULTIPLE PAGE clause is **not** allowed in a group that has a **REPEATED** clause.

### 3.12.3 MULTIPLE PAGE Clause: Operation

1. The MULTIPLE PAGE clause enables a single report group to occupy **any number** of **consecutive pages**. It allows you to code **NEXT PAGE** on as many LINE clauses as you wish throughout the group (rather than just on the **first**). It also allows you to define as many relative lines as you wish, **irrespective of the size of the page**. Thus you can print very large tables using a single **GENERATE**.

2. When the group is a body group with **MULTIPLE PAGE**, **no** page-fit test is performed for the group as a whole. Instead, each report line is subjected to an individual page-fit test. A LINE clause with **NEXT PAGE** also causes a page advance to take place. Loosely speaking then, a *multiple page group* may begin at any point and cause a page advance at any point.

3. When a page advance is required, a PAGE FOOTING and PAGE HEADING group are printed as usual if defined. This is the only case where groups may *interrupt* another group. If the line that caused the page advance is relative, it is placed in the FIRST DETAIL position, disregarding the *integer* of its LINE clause. In the following layout, note how the "ROBINSON" group (in blue) spans three pages:

```
01  SPORTS-LIST  TYPE DE  MULTIPLE PAGE.
  03   LINE      COL 1    PIC X(20)   SOURCE W-SURNAME.
  03   LINE OCCURS 1 TO 100 VARYING R-SPORT
       COL 3     PIC X(20)     SOURCE W-SPORT (R-SPORT).
```

4. **NO MULTIPLE PAGE** can be used to prevent the lines in its scope from being split over a page boundary. If an OCCURS clause is also present, this rule applies **separately** to **each occurrence**. In the following example we want each set of address lines to remain together on the page:

```
01  PREVIOUS-ADDRESSES   MULTIPLE PAGE.
  03  OCCURS 0 TO 20 TIMES DEPENDING ON NUMBER-OF-PREV-ADDRESSES
        VARYING R-ADDR-NO
        NO MULTIPLE PAGE.
    05  LINE OCCURS 0 TO 6 TIMES VARYING R-LINE-NO
       ABSENT WHEN W-ADDR-LINE (R-ADDR-NO R-LINE-NO) = SPACES.
      07  COL 1 PIC X(64)  SOURCE R-LINE (R-ADDR-NO R-LINE-NO).
```

5. At the *01* level, NO MULTIPLE PAGE merely documents the usual situation that a group cannot span pages.

### 3.12.4 Compatibility

The MULTIPLE PAGE clause is unique to new Report Writer.

## 3.13 NEXT GROUP clause

This clause is used to **create additional vertical space** after a group, without causing page overflow if there is no room on the page for the extra blank lines.

### 3.13.1

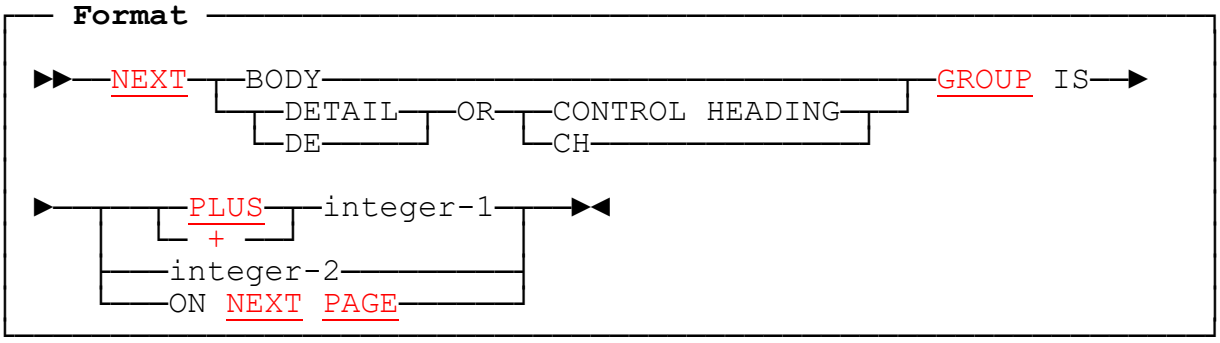


### 3.13.2 NEXT GROUP Clause: Coding Rules

1. This clause must be written only at the *01*-level.

2. You can use the clause in **any body group** (DETAIL or CH/CF) and also in a **REPORT HEADING** (provided that a PAGE HEADING is present) as well as in a **PAGE FOOTING** (provided that a REPORT FOOTING is present).

3. If your report has no PAGE LIMIT clause, you can use only the **+ integer-1** form.

4. The optional words **BODY** and **DE OR CH** document the effect of the NEXT GROUP clause in the context of the type of group in which it is coded, but they do not have any actual effect on the clause. You can write NEXT **BODY** GROUP only in a DETAIL or CONTROL HEADING group, and NEXT **DE OR CH** GROUP only in a CONTROL FOOTING group.

5. DE OR CH may also be written: DETAIL OR CONTROL HEADING, CH OR DE, or CONTROL HEADING OR DETAIL.

### 3.13.3 Effect of NEXT GROUP on Body Groups

1. Subject to certain constraints, the NEXT GROUP clause causes report writer to increase the value of LINE-COUNTER **after** all the lines in the body group have been produced, so that the next body group appears on a new page or after an additional vertical gap.

2. If you write **NEXT GROUP + integer-1**, report writer will **add** integer-1 to LINE-COUNTER, but using the LAST CONTROL FOOTING value as a maximum limit. This creates an extra "*gap*" of that many lines between this group and the next, provided that there is room for both to appear on the same page. The following diagram shows how to use the clause to create more space after a CONTROL FOOTING:

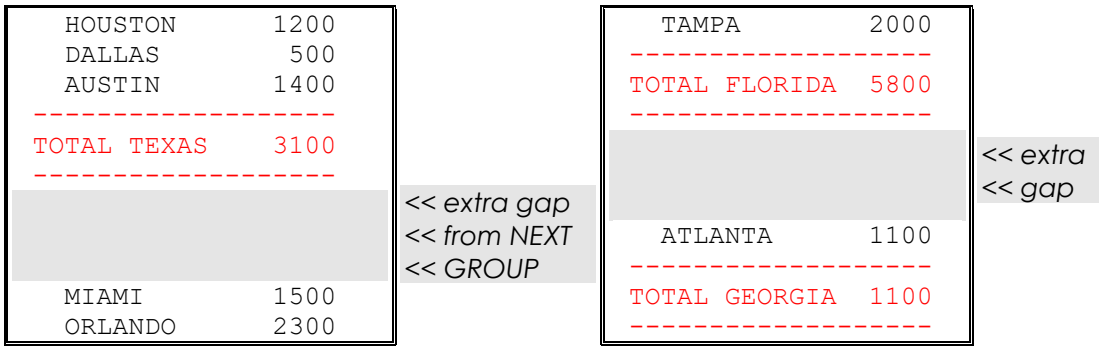


```
01   CF FOR STATE   NEXT GROUP PLUS 3.
     ...
```

Notice that there is no "gap" after the TOTAL GEORGIA group, because it already extends to the LAST CONTROL FOOTING position.

You might suppose that you could also get extra blank lines by writing a blank LINE entry (containing no COLUMN entries or just a VALUE of SPACES) at the end of the group. But this is **not** a satisfactory replacement for the NEXT GROUP clause, because the blank LINE is treated as a part of the group and will affect the page-fit test. For example, if you had written

```
03   LINE + 2.
```

or

```
03   LINE + 2.
  05   COL 1        VALUE " ".
```

at the end of the CF group instead of the NEXT GROUP clause in the above example, the TOTAL GEORGIA group would have appeared at the top of the next page, because its total depth would now be 5 lines instead of 3. Likewise, a LINE + 2 at the front of the DETAIL group would produce unwanted blank lines ahead of every DETAIL group.

3. The **NEXT GROUP integer-2** (*absolute*) form **may** force the next body group to be produced relative to the given line number. Report writer first examines the LINE-COUNTER. If this is less than *integer-2* (in other words, if that position has not yet been reached), LINE-COUNTER is set equal to *integer-2*. Otherwise, report writer sets LINE-COUNTER equal to LAST CONTROL FOOTING to ensure that no more body groups will appear on this page and saves the value of *integer-2* in the *Saved Next Group Integer* location. Before the next body group, if any, is produced, report writer sets LINE-COUNTER equal to the saved integer. It is inadvisable to use this form of the clause unless your next body group will always be a relative group.

4. If you write **NEXT GROUP NEXT PAGE**, report writer will set LINE-COUNTER to the LAST CONTROL FOOTING value. This forces report writer to leave the rest of the page blank and begin the next body group, if any, on the next page. (LAST CONTROL FOOTING is the lowest position on which any body group can appear as described under 2.9 *PAGE LIMIT clause*).

   To begin on a fresh page after a control break, you may place NEXT GROUP NEXT PAGE in the CONTROL FOOTING for that control level, as the following example shows:

```
  HOUSTON       1200
  DALLAS         500
  AUSTIN        1400
-------------------
TOTAL TEXAS     3100
-------------------
```

*<<rest of <<page is <<blank.*

```
  MIAMI         1500
  TAMPA         2000
-------------------
TOTAL FLORIDA   3500
-------------------
```

*<<rest of <<page is <<blank.*

```
01   CF FOR STATE          NEXT GROUP NEXT PAGE.
  03   LINE                VALUE "-----------------".
  03   LINE.
    05   COL 1             VALUE "TOTAL".
    05   COL + 2           PIC X(9)     SOURCE STATE.
    05   COL + 1           PIC ZZZ9     SUM OF SALES.
  03   LINE                VALUE "-----------------".
```

5. If you write a NEXT GROUP clause in a CONTROL FOOTING group, report writer checks the level of the control break being processed before putting the clause into effect. If the level of the break is **higher than the level of this group**, the NEXT GROUP clause is **ignored**. This means that a CONTROL FOOTING's NEXT GROUP clause can never affect the position of the next CONTROL FOOTING. As the following example shows, the CONTROL FOOTING FOR REPORT (the grand total) will **not** be forced onto a new page. To document this fact, the optional words DE OR CH are provided in the syntax.

```
  HOUSTON       1200
  DALLAS         500
  AUSTIN        1400
-------------------
TOTAL TEXAS     3100
-------------------
```

*<<rest of page is blank*

```
  MIAMI         1500
  TAMPA         2000
-------------------
TOTAL FLORIDA   3500
-------------------

GRAND TOTAL    73400
===================
```

*<<NEXT GROUP has no effect on next TYPE CF group.*

```
01  CF FOR STATE   NEXT DE OR CH GROUP NEXT PAGE.
    ...
01  CF FOR REPORT.
  03   LINE + 2.
    05   ...
```

If you should **want** the CONTROL FOOTING FOR REPORT to appear on a new page in this case, you should instead code **ON NEXT PAGE** in its first LINE clause.

6. You can code a **dummy** report group containing only a NEXT GROUP clause, as in the example below. When the group is processed, no output takes place, but LINE-COUNTER will be set equal to LAST CONTROL FOOTING solely because of the NEXT GROUP NEXT PAGE clause. This may be useful when you want to begin a new page on change of, say, BRANCH, but there is no subtotal that would normally justify coding a CONTROL FOOTING group. Just write:

```
01    CF FOR BRANCH    NEXT GROUP NEXT PAGE.
```

To obtain a gap of three lines at any time, as an alternative to altering LINE-COUNTER directly, code:

```
01    THREE-LINE-GAP    DE    NEXT GROUP + 3.
```

and in your Procedure Division, write: **GENERATE THREE-LINE-GAP**.

### 3.13.4 Effect of NEXT GROUP on Non-Body Groups

1. You can write a NEXT GROUP clause in a **REPORT HEADING** group, in which case the group affected will be your **first PAGE HEADING** group, which immediately follows the REPORT HEADING. NEXT GROUP NEXT PAGE indicates that the REPORT HEADING is to be by itself on a separate page, rather than on the first page above the PAGE HEADING, but this will be assumed anyway if the REPORT HEADING will not fit above the first PAGE HEADING.

2. You can also write NEXT GROUP in a **PAGE FOOTING group**, in which case it affects the **REPORT FOOTING**. This form is never necessary, as the first LINE clause used in the REPORT FOOTING is a better way to handle this case.

### 3.13.5 Compatibility

- Only new Report Writer provides the following features:
- The optional words BODY and DE OR CH.
- Optional word ON before NEXT PAGE.

## 3.14 OCCURS clause

The OCCURS clause is used to show **regular repetition** of a field or a group of fields in a horizontal dimension, and a line or group of lines in a vertical dimension.

### 3.14.1

**Format**

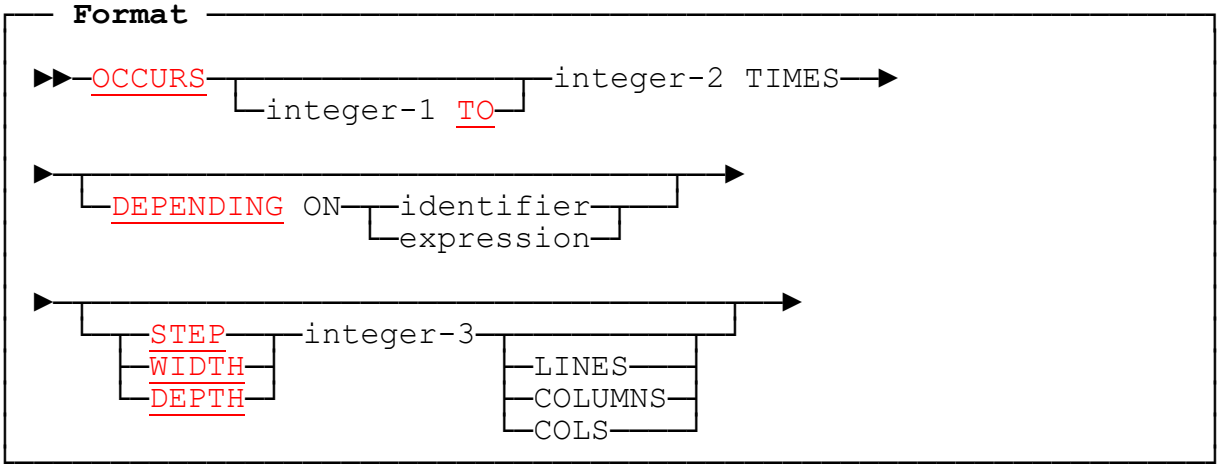


### 3.14.2 OCCURS Clause: Coding Rules

1. The OCCURS clause must **not** be used at the *01*-level.

2. You may use the OCCURS clause at any of these levels:

   a. **Below the LINE level in an elementary entry**. Your field will be repeated **horizontally** the number of times indicated by the operand:

```
03   LINE.
  05   COL + 2     "NO"     OCCURS 5.
```

```
NO NO NO NO NO
```

   b. **Below the LINE level in a group entry**. The whole group of fields will be repeated **horizontally** the number of times indicated by the operand.

```
03   LINE.
 04   OCCURS 3.
  05   COL + 3     "DATE".
  05   COL + 2     "AMOUNT".
```

```
 DATE AMOUNT   DATE AMOUNT   DATE AMOUNT
```

c. **At the LINE level**. The line will be repeated **vertically** the number of times indicated by the operand.

```
03   LINE   OCCURS 4.
  05   COL 1          "NAME".
  05   COL 21        "ADDRESS".
```

yielding:

```
NAME                ADDRESS
NAME                ADDRESS
NAME                ADDRESS
NAME                ADDRESS
```

d. **Below the 01-level but above the LINE level**. The whole group of lines will be repeated **vertically** the number of times indicated by the operand.

```
02   OCCURS 3.
 03   LINE + 2          COL 1          "NAME".
 03   LINE + 1          COL 1          "ADDRESS".
```

```
NAME
ADDRESS

NAME
ADDRESS

NAME
ADDRESS
```

*Each group of LINE + clauses takes effect number of times given in the OCCURS clause.*

These four levels are known as *axes*. Any fields in your group can be repeated in this way on any of the four axes, and you may have repetition on up to **four** axes by **nesting** the OCCURS clauses. Each of your report groups may have any number of OCCURS clauses, provided that the nesting limit of four is never exceeded at any one time.

3. You may use **STEP**, **WIDTH**, or **DEPTH** to specify the distance between the start of successive repetitions. Its operand indicates the number of columns or lines between the start of one item and the start of its successor:

```
   05   COL 1   "PRICE"   OCCURS 4   WIDTH 8 COLUMNS.
```

```
PRICE   PRICE   PRICE   PRICE

< - 8 ->
```

*Integer-3* of the STEP phrase must be at least as large as the field itself. WIDTH and DEPTH are alternative keywords with the same meaning as STEP. WIDTH may be used only in the horizontal direction and DEPTH may be used only in the vertical direction. You can write the documentary words COLUMNS or LINES after integer-3 to make the direction explicit. The STEP, WIDTH, or DEPTH phrase may be coded anywhere within the entry.

4. A STEP phrase is **expected** if your repeating entry is **absolute**. (It is absolute if you write **COLUMN integer** or **LINE integer** or, in the case of a group field, if the first COLUMN or LINE in the group is absolute.) However, if you omit STEP, a minimum value will be assumed, equal to the (maximum) size of the report field, with a cautionary message.

5. If your field is **relative**, the STEP phrase is optional. If you omit it the distance between repetitions is the physical size of the field, which may vary at run time if there are **"<"** PICTURE symbols or if the field is a group field containing entries with a **PRESENT WHEN** clause.

6. As the examples above illustrate (item 2 a through d), the VALUE clause **is** allowed within an entry subject to an OCCURS clause.

7. You **must** code the **DEPENDING ON** phrase if the number of occurrences is **variable**. The **expression** can be any COBOL numeric identifier or arithmetic expression that has an integer value. The data items used in your expression can come from anywhere in your program. They need not appear elsewhere as report fields and need not reside in the same "record" as the SOURCE fields.

8. *Integer-1* in the format above and the **TO** keyword are used only in conjunction with *DEPENDING ON*. Integer-1 must be less than *integer-2* and may be zero. If you omit **integer-1 TO** and write **OCCURS integer-2 TIMES DEPENDING ON**, this is taken to mean OCCURS **0 TO** integer-2 TIMES DEPENDING ON.

### 3.14.3 OCCURS Clause: Operation

1. You should use the OCCURS clause for source-code reduction when you need to obtain **automatic repetition** either **horizontally** or **vertically** within a report group. The effect is as though you had coded every entry individually.

2. You may use a **single-operand VALUE** to place the **same** contents in **each** repetition.

3. If you use a SOURCE clause within an entry subject to OCCURS, the **same** SOURCE operand will be used to set up each occurrence. However, you may allow the effective SOURCE operand to **vary** by use of the VARYING clause and making use of the VARYING data-name as its subscript or as a term in the SOURCE operand. (See 3.27 *VARYING clause* for full details and examples.)

4. You may also use a *multiple SOURCES* (see 3.21 *SOURCE clause*) or *multiple VALUES* (see 3.26.4 *Multiple VALUES*) to place **different** contents in each repetition. The following sample layout shows both methods of combining both SOURCE and VALUE clauses with OCCURS:

```
            SPORTS EQUIPMENT COMPANY: WAGES SUMMARY
AREA            BASIC PAY           OVERTIME          COMMISSION

NORTH          $1,420,000           $600,000           $150,500
EAST           $2,100,000           $850,000           $220,000
SOUTH          $1,870,000         $1,000,000           $350,000
WEST             $970,000           $250,000           $110,000
```

which may be coded as follows:

```
01   SUMMARY-PAGE.
  03  LINE 1       COL CENTER 25  "SPORTS EQUIPMENT COMPANY: WAGES SUMMARY".
  03  LINE 2       COLS 1 11 26 39
                   VALUES     "AREA" "BASIC PAY" "OVERTIME" "COMMISSION".
  03   LINE 4      OCCURS 4  STEP 1       VARYING AREA-NO.
    05   COL 1     VALUES     "NORTH" "EAST" "SOUTH" "WEST".
    05   COLS RIGHT 19 33 47    PIC $$$,$$$,$$9
            SOURCES BASIC-PAY (AREA-NO), OVERTIME (AREA-NO), COMM (AREA-NO).
```

Notice how the series of **row-heading** items (NORTH, EAST, etc.) is handled: the enclosing OCCURS at the LINE level simply steps through each item in the series in turn.

5. If a PRESENT WHEN clause is coded in the same entry as an OCCURS clause, the PRESENT WHEN applies **separately to each occurrence** (see 3.18.3). If the STEP phrase is **not** used, an entry that is *ABSENT* will not take up any space, as in the case below where non-negative values are to be skipped:

```
LOSS-MAKING MONTHS:

MARCH          $12000
JUNE            $1000
OCTOBER        $23000
```

```
01  LOSS-MONTHS      TYPE DE.
  03  LINE    OCCURS 12    VARYING R-MONTH
      PRESENT WHEN PROFIT (R-MONTH) < 0.
    05  COL 1        PIC X(9)
        SOURCE MONTH-NAME (R-MONTH).
    05  COL 12       PIC $(6)9
        SOURCE PROFIT (R-MONTH).
```

The effect is similar in the horizontal direction:

```
      MAR   JUN   OCT
      120   230   100
```

```
      01   LOSS-LINE       TYPE DE.
        03   LINE.
          05   COL + 3   OCCURS 12     VARYING R-MONTH
               PRESENT WHEN PROFIT (R-MONTH) < 0
               PIC XXX       SOURCE MONTH-NAME (R-MONTH).
      03   LINE.
          05   COL + 2   OCCURS 12     VARYING R-MONTH
               PRESENT WHEN PROFIT (R-MONTH) < 0
               PIC ZZZ9      SOURCE PROFIT (R-MONTH).
```

However, if a STEP phrase is used, the spacing - in whichever direction - is regular and even entries that are *ABSENT* take up their usual space:

```
JAN    FEB    MAR    APR    MAY    JUN    JUL    AUG    SEP    OCT    NOV    DEC
              120                  230                          90
```

which may be coded as follows:

```
01  LOSS-MONTHS    TYPE DE.
  03  LINE.
    05  COL + 3    OCCURS 12  VARYING R-MONTH
                   PIC XXX  SOURCE MONTH-NAME (R-MONTH).
  03  LINE.
    05  COL 2      OCCURS 12  VARYING R-MONTH   STEP 5
        PRESENT WHEN PROFIT (R-MONTH) < 0
                   PIC ZZZ9   SOURCE PROFIT (R-MONTH).
```

### 3.14.4 Use of OCCURS...DEPENDING ON

1. If your report group has an OCCURS clause with a **DEPENDING ON** phrase, report writer will evaluate the associated *identifier* or *expression* at run time on each separate occasion when the report group is about to be generated. If its value is outside the range of *integer-1 TO integer-2* in your OCCURS clause, this is **not an error** condition, and report writer will assume the maximum number, *integer-2*.

2. Now that the actual number of repeats is known, report writer creates **only that number** of occurrences, treating your clause as though you had written a **fixed** OCCURS clause with that number as the **integer**. **This is an important notion.** Here are some of its consequences:

   a. If your OCCURS ... DEPENDING is in the **horizontal** direction and is followed by an **absolute** COLUMN clause, the space not filled by excess occurrences will be **blank**:

```
05  COL 1   VALUE "ONE"  OCCURS 5 DEPENDING ON COUNT-1 STEP 5.
05  COL 27  VALUE "END".
```

   If COUNT-1 contains 3, the effect is as though you had written:

```
05   COL 1  VALUE "ONE"  OCCURS 3   STEP 5.
05   COL 27 VALUE "END".
```

```
ONE    ONE    ONE              END
```

   b. If your OCCURS ... DEPENDING is in the **horizontal** direction and is followed by a **relative** COLUMN, it is positioned relative to the **last actual** occurrence:

```
05   COL 1  VALUE "TWO"  OCCURS 5 DEPENDING ON (A + B) STEP 6.
05   COL +2 VALUE "END".
```

If A + B equals 3, the result is as though you had written:

```
05   COL 1    VALUE "TWO"   OCCURS 3   STEP 6.
05   COL +2   VALUE "END".
```

```
TWO     TWO     TWO END
```

c. If your OCCURS ... DEPENDING is in the **vertical** direction and is followed by an **absolute** LINE, excess occurrences will be **blank**:

```
03   LINE 2      OCCURS 1 TO 4 DEPENDING ON COUNT-1   STEP 1.
  05   COL 1     VALUE "ADDRESS LINE".
03   LINE 6.
  05   COL 1     VALUE "ZIPCODE".
```

If COUNT-1 contains 2, the result is as though your OCCURS 1 TO 4 clause above were simply coded as OCCURS 2:

```
ADDRESS LINE          << line 2
ADDRESS LINE          << line 3


ZIPCODE               << line 6
```

d. If your OCCURS ... DEPENDING is in the **vertical** direction and is followed by a **relative** LINE, no line positions will be occupied by the unused occurrences, and the line that follows will be relative to the last actual occurrence.

```
03  LINE + 1   OCCURS 4 DEPENDING ON COUNT-1.
  05  COL 1     VALUE "ADDRESS LINE".
03  LINE + 1.
  05  COL 1     VALUE "ZIPCODE".
```

```
ADDRESS LINE          << line + 1
ADDRESS LINE          << line + 1
ZIPCODE               << line + 1
```

The *page-fit test* allows only for the occurrences that are **actually present**. So, if the group as a whole is relative, you will have a "best fit". For instance, if you **GENERATE** the above group and only three lines are available to it, the group **will** fit on the page.

3. You may code several entries with OCCURS ... DEPENDING in the same report line and nest horizontal and vertical repetitions to produce many varied and useful effects. The DEPENDING expression is re-evaluated each time the item is about to be output, so you may **alter** the size and shape of your report fields **dynamically** and automatically. You may also use OCCURS ... DEPENDING in a horizontal or vertical **group** entry.

### 3.14.5 Compatibility

The use of the OCCURS clause in the report section, and the optional phrases, are unique to new Report Writer.

# 3.15 PAGE-COUNTER

This special register contains the **number of the current page**.

### 3.15.1

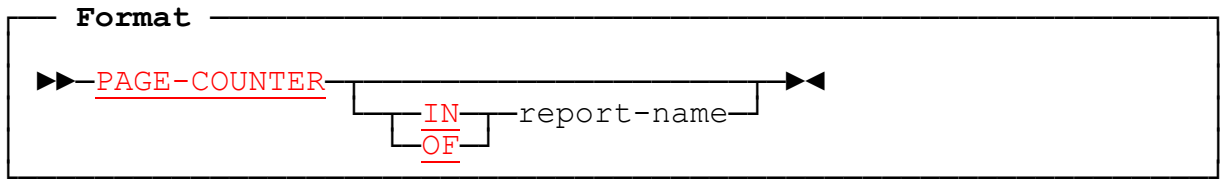


### 3.15.2 Uses of PAGE-COUNTER

1. PAGE-COUNTER contains the number of the current page. It is set to **1** by the INITIATE statement and, if your report has a PAGE LIMIT clause, is incremented by 1 on each page advance after the initial one. So its value is **1** on the first page, **2** on the second, and so on. The incrementing takes place between the production of your **PAGE FOOTING** group, if you defined one, and your PAGE HEADING group, if you defined one. So accessing PAGE-COUNTER in a USE BEFORE REPORTING Declarative section for a PAGE HEADING, for example, yields the value that applies to the **new** page. The TERMINATE statement leaves PAGE-COUNTER unchanged.

2. You may treat PAGE-COUNTER as a numeric location (implicit **PICTURE S9(9) COMP SYNC**) in any SOURCE expression or condition. For example, to print the page number anywhere in the page, write:

```
PIC ZZZ9 SOURCE IS PAGE-COUNTER.
```

   You can change the value of PAGE-COUNTER at any time. Just treat it as any numeric data item (except that report writer defines it automatically). As an example, if you want to restart your page numbering from 1, after each control break, code

```
MOVE ZERO TO PAGE-COUNTER
```

   in a Declarative SECTION for the CONTROL HEADING, so that when report writer next does a page advance it will increment it from zero to one.

3. Like all of the special registers except COLUMN-COUNTER, a PAGE-COUNTER is maintained **separately for each report**, because all your reports are completely independent of each other. This also means that you must occasionally **qualify** PAGE-COUNTER if you have more than one report in the program. You do this by using *report-name* as a **qualifier**, as shown in the format at the head of this section.

   You need a qualifier only if there is ambiguity, that is, in the main-line PROCEDURE DIVISION. In the *Report Group Descriptions* and in a USE BEFORE REPORTING directive section report writer assumes that you mean *"IN current-report"*. However, you **may** still use a qualifier even in those cases, for instance when you want to access the PAGE-COUNTER of a **different** report. More information on Multiple Reports will be found later (see 5.1).

4. If your report contains a REPORT HEADING that is on a page by itself, the value of PAGE-COUNTER for the first page of details will be **2**, since page 1 is occupied by the REPORT HEADING. If you want PAGE-COUNTER to be **1** on the first page of details, you will need to code

```
MOVE ZERO TO PAGE-COUNTER
```

after the INITIATE statement.

### 3.15.3 Compatibility

OS/VS and DOS/VS COBOL require PAGE-COUNTER to be qualified wherever it is used if your program contains more than one RD.

# 3.16 PICTURE clause

A PICTURE clause is used, as in basic COBOL, to indicate the size and format for each report field.

### 3.16.1

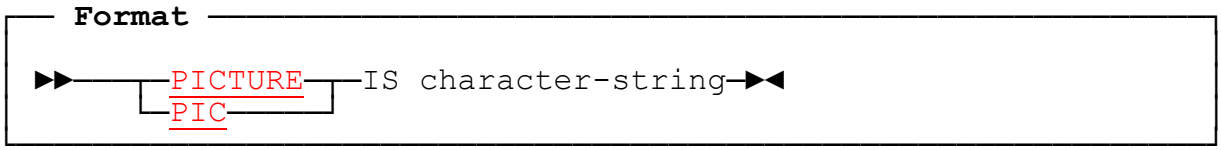


### 3.16.2 PICTURE Clause: Coding Rules

1. All the available PICTURE symbols may be used, including a *currency symbol* defined by a **CURRENCY SIGN** phrase, provided they are consistent with a DISPLAY field, and the rules for combining them are exactly as for basic COBOL. Here are some examples:

   **PIC ZZZZ9.99** reproduces the field with up to **five** integral places, of which four leading zeros can be changed to a space, followed by a decimal point and **two** fractional places.

   **PIC -$(5)9** outputs a "-" sign if the field is negative, followed by from 1 to 6 digits, with leading zeros changed to a space, and a currency symbol placed immediately before the first digit.

   **PIC XXBXXBXX** outputs a **six**-character field, with spaces inserted between characters 2 and 3, and characters 4 and 5.

2. If the item is *DBCS* (*Double-Byte Character Set*), the PICTURE may contain only the symbols **G** and **B** (representing a DBCS space). However, a PICTURE clause is **not** required with a DBCS literal.

3. Report writer allows the additional *left-shift* PICTURE symbols "**<**" and "**>**" to indicate that all or part of your field is **variable-length** . These symbols may be used **only** in the REPORT SECTION. You may place the "<" symbol anywhere within the PICTURE, in any number of places, provided that it is followed by one of the following symbols: "X", "A", "9", "Z", or floating (that is, repeated) "-". (In other words, it must appear before a symbol that represents "data", as opposed to an "editing" symbol.) The ">" symbol may optionally be used to terminate its scope. The effect of these symbols is described below (see 3.16.4).

4. Report writer also allows **general insertion characters**, in the REPORT SECTION only. These are indicated by writing the characters to be inserted in "*quotes*" (or '*apostrophes*') anywhere in the PICTURE, for example: **PIC 99"."99"."99**. These insertion characters do **not** take a repetition factor (so that PIC "."(5)X is invalid and must be written PIC "....."X).

5. You may **omit** the PICTURE clause in an entry that has a VALUE clause, whether **nonnumeric** (when a PICTURE X(n) is assumed) or (unsigned) **numeric** (when a PICTURE S9(n) DISPLAY is assumed.) (A **SYMBOLIC CHARACTER** is treated as a one byte nonnumeric.) A PICTURE **is** required if you use **ALL "literal"**, or a *figurative constant* such as **QUOTE**. In the case of a multiple VALUE or multiple-choice entry, there may be several "literals" but still **no** PICTURE is required.

6. If you use a **SOURCE**, **SUM/COUNT**, or **FUNCTION** clause, the PICTURE is necessary, even if you want to display the field in exactly the same format in which it is stored.

7. If the *OSVS* precompiler option is in effect, PICTURE symbol **"A"** may be used even with a literal that is not entirely alphabetic.

8. In common with the rest of the DATA DIVISION, PICTURE is allowed only in an elementary entry.

### 3.16.3 PICTURE Clause: Operation

1. In the REPORT SECTION, the PICTURE clause plays the same role as it does in other SECTIONs. The rest of this section and the next describe the extensions which are unique to the REPORT SECTION.

2. **General insertion characters** may used to reduce the number of entries to be coded. For example:

```
05  COL 1       VALUE "(".
05  COL +1      PIC 99          SOURCE W-TODAY-YY.
05  COL +1      VALUE ".".
05  COL +1      PIC 99          SOURCE W-TODAY-MM.
05  COL +1      VALUE ".".
05  COL +1      PIC 99          SOURCE W-TODAY-DD.
05  COL +1      VALUE ")".
```

may be reduced to:

```
05  COL 1   PIC "("99"."99"."99")"  SOURCE W-TODAY.
```

and:

```
05  COL 20      PIC <9(5)>9   SOURCE LETZTE-ZAHLUNG.
05  COL +1      VALUE "DM".
```

may be reduced to:

```
05  COL 20    PIC <9(5)>9"DM" SOURCE LETZTE-ZAHLUNG.
```

and:

```
05  COL 100      VALUE "Page:".
05  COL +2       PIC ZZ9   SOURCE PAGE-COUNTER.
```

may be reduced to:

```
05  COL 100   PIC "Page: "ZZ9   SOURCE PAGE-COUNTER.
```

Note that an insertion character specified in this way never has any semantic significance. Thus "." is never treated as a decimal point for alignment purposes.

### 3.16.4 Variable-Length Fields ("<" and ">" Symbols)

1. If you code the **"<"** symbol somewhere in your PICTURE in the REPORT SECTION, report writer takes it as referring to the following symbol and repetitions of that symbol, until the end of the PICTURE or a change of symbol is found. (The use of parenthesis as a shorthand for repetition does not count as a change of symbol.) The "<" symbol itself does not contribute to the length of the field. In the following case:

```
PIC 9<99,999.<99
```

Report writer will divide the field into the following parts:

9 (1 character fixed)
**<99** (0 to 2 characters variable)
,999. (all fixed)
**<99** (0 to 2 characters variable)

The variable parts of your field are represented by those parts of your PICTURE that follow a "<" symbol, up to a change of symbol. To mark where each variable part ends, you may code a ">" symbol, resulting, in the above case, in:

```
PIC 9<99>,999.<99>
```

By convention, **PIC <Z(n)** is taken to mean the same as the more conventional **PIC <9(n)**, and **PIC <$(n)** is understood to mean the same as **PIC $<9(n-1)**.

2. When your field is output, report writer first stores the value to be output in a working area whose PICTURE is the same as the PICTURE you coded but **without the "<" symbol(s)** . It then examines each part of your field that corresponds to a variable part of the PICTURE. If the symbol after the "<" is "X" or "A", that part is **non-numeric** and report writer will **delete trailing spaces** (that is, it will not advance COLUMN-COUNTER over them). If the symbol after the "<" is "9" or "Z" or "-", that part is **numeric** and report writer will **delete leading zeros** by left-shifting the contents of the rest of the field. After a decimal point, either explicit (.) or implicit (V) followed by a "<" symbol, it is **trailing zeros** that are deleted.

3. When characters are deleted, any characters that follow them are **pulled to the left** over them. This gives a *free format* effect to variable fields that have several parts. When the field has been output, the horizontal pointer (COLUMN-COUNTER), will point to the **last** character stored. If your next entry has an absolute COLUMN, you will have a variable number of spaces from the end of this field to the fixed starting point of the next. If, however, your next entry has a **relative** COLUMN (COL +), the number of spaces between the fields will be fixed, but the starting position of the next field will vary.

4. You may use the "<" and ">" symbols to split any part of your field into two fragments, one variable and one fixed, resulting in a *minimum* size and a *maximum* size. For example: **PIC XX<XXX>** means *from 2 to 5 non-numeric characters*; while **PIC <999>9** means *from 1 to 4 numeric characters* (a form that is more useful than PIC <9(4) because a value of all zeros is reproduced as a zero).

5. Here are some examples of the "<" symbol:

a. If PICTURE **$9999.99** gives you the result: `$0000.50`

then PICTURE **$9<999.<99** will give you the result: `$0.5`

b. If PICTURE **99/99/99** gives you the result: `21/09/00`

then PICTURE **<99/<99/<99** will give you the result: `21/9/`

c. If
```
05  COL 1      PICTURE X(6)   SOURCE TITLE.
05  COL + 2    PICTURE X(20)  SOURCE SURNAME.
05  COL + 1    ":".
```

gives you the result: `MR.    SMITH`

then
```
05   COL 1       PICTURE <X(6)   SOURCE TITLE.
05   COL + 2     PICTURE <X(20)  SOURCE SURNAME.
05   COL + 1     ":".
```

will give you the result: `MR. SMITH`

6. Special action is taken with the "," (*comma*) and "." (*decimal point*) symbols. If you write a "<" and a series of "9" symbols before "," and the numeric value that corresponds to them is zero, then the "," will also be deleted. Also, if you write "<" after a "." (decimal point) and all the numeric positions after the decimal point are zero, then the decimal point will also be deleted. For example, if your field is described as:

```
PICTURE <99,<999,<999.<99
```

then values of **00002345.10** and **00000001.00** will be reproduced as:

`2,345.1` and: `1` respectively

7. Any "," or "." encountered in a numeric field after a "<" symbol turns off the effect of the "<". If you want its effect to persist across such an insertion character, you must turn it on again by coding another "<" symbol; for example: PIC 9,<999>,**<**999**>**.99.

### 3.16.5 Compatibility

1. Only new Report Writer allows the '<' and '>' symbols and general insertion characters in quotes or apostrophes. In all other aspects of the PICTURE clause, both implementations are compatible.

2. The general insertion character feature may be incompatible with Codasyl (and hence some future standard) if quotes or apostrophes in a PICTURE are ascribed some different significance.

# 3.17 PRESENT AFTER clause

This clause is similar to the PRESENT WHEN clause (see 3.18), except that it tests a condition arising **internally** within report writer's automatic control-break and page-advance processing, rather than evaluating a general COBOL condition.

## 3.17.1

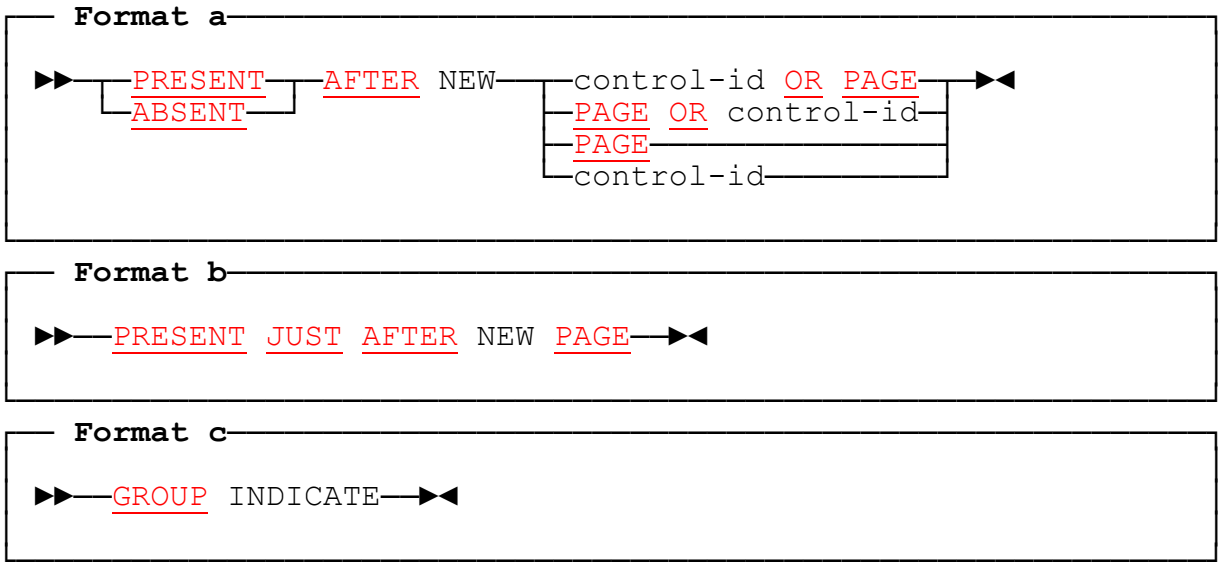


## 3.17.2 PRESENT/ABSENT AFTER Clause: Coding Rules

1. If you specify the **PAGE** keyword, the RD for your report must have a PAGE LIMIT clause. If you specify a *control-id*, then it must be one of the controls listed in your **CONTROL** clause in the RD, except that REPORT or FINAL is always assumed to be present in the CONTROL clause.

2. You may code this clause at the group or elementary level and may *nest* clauses.

3. You may use *format a* in any body group (DETAIL or CH/CF), but, if you use the *control-id* option in a CONTROL HEADING or CONTROL FOOTING group, the control level you refer to must be **higher** than the control level of the report group in which the PRESENT AFTER clause is coded.

4. You may also use format a in a PAGE HEADING or PAGE FOOTING group, but only with the *control-id* option.

5. *Format b* (with the **JUST** phrase) can be used only in a **body group**.

6. *Format c*, the **GROUP INDICATE** clause, is provided for compatibility with current standards. Except for one minor but useful difference in its action with **OCCURS** (see below), it is equivalent to the clause:

```
PRESENT AFTER NEW PAGE OR lowest-control-id
```

where **PAGE** is present if the report has a PAGE LIMIT clause, and the *control-id* is present if the report has a CONTROLS clause.

For example, if the RD entry has the format:

```
RD  ...
    PAGE LIMIT 60 LINES
    CONTROLS BRANCH-NO ZONE-ID.
```

the GROUP INDICATE clause is equivalent to:

```
PRESENT AFTER NEW PAGE OR ZONE-ID.
```

7. It is **not** advisable to refer to an item subject to PRESENT/ABSENT AFTER or GROUP INDICATE in a **SUM** clause. This is because, according to the ANS standard that applies if the option is in effect, summing takes place **before** the page-fit, so it not always easy to predict whether the item to be summed will actually be present.

### 3.17.3 PRESENT/ABSENT AFTER Clause: Operation

1. The PRESENT AFTER clause operates in a way similar to a PRESENT WHEN clause except that our condition is set from within the report itself. **PRESENT AFTER NEW control-id** behaves like a clause of the form:

```
PRESENT WHEN this group has never yet been output
        OR a control break has occurred at that level or above
           since the last time it was output
```

while PRESENT AFTER NEW PAGE behaves like a clause of the form:

```
PRESENT WHEN this group has never yet been output
        OR a page advance has taken place
           since the last time it was output
```

To understand this clause fully you should therefore refer to the PRESENT WHEN clause (see 3.18).

2. If you code **PRESENT AFTER NEW control-id**, report writer will output the field (elementary or group field), provided that this is the **first** occasion **this** report group has been output since the start of the report or since the last control break at the level of *control-id* or above. For example, if you write PRESENT AFTER NEW BRANCH-NO, your report field will be produced at the beginning of the report and at the first GENERATE after each change of BRANCH-NO (or any higher control). Otherwise, the field is **ignored**, together with any subordinate entries, in exactly the same manner as with the PRESENT WHEN clause.

   In the following example, the field YEAR-NO is to be output the first time only and then whenever it has changed, while SEASON-NO is to be output the first time and then whenever it **or YEAR-NO** has changed.

```
YEAR SEASON   NAME            SPORT

1991 WINTER  CODER T.J.       BADMINTON
             HACKER S.        RUGBY
             MANAGER D.P.     SWIMMING
     SPRING  EDITOR F.        RIDING
             LOAD V.          CRICKET
             TESTER S.        GOLF
     SUMMER  DUMP J.          TENNIS
1992 SUMMER  ANALYST R.       SWIMMING
             ... etc ...
```

```
RD   ...      CONTROLS ARE YEAR-NO, SEASON-NO.

01   NEW-MEMBER      TYPE DE        LINE + 1.
  05  COL 2  PIC 9(4) SOURCE YEAR-NO PRESENT AFTER NEW YEAR-NO.
  05  COL 7  PIC X(6) SOURCE WS-SEASON (SEASON-NO)
                              PRESENT AFTER NEW SEASON-NO.
```

3. As is usual with controls, a higher control break implies a control break at all the lower levels. Thus if you code PRESENT AFTER MONTH when YEAR and MONTH are the controls, the field will be *PRESENT* also after a change of YEAR, for JAN 1992 is certainly different from JAN 1991!

4. If you code **PRESENT AFTER NEW PAGE**, report writer will produce the entry if this is the **first** occasion this group has been produced **since the start of the report** or **since the last page advance**. Otherwise, again, the field is not output.

   As the following example shows, it may cause the entry to be produced at any position within the page provided the group containing it has not yet appeared on the page. If you want the entry to appear only if this group is also the **first** body group of the page, you should instead use the form: **PRESENT JUST AFTER NEW PAGE**. In the example that follows, this would prevent the subheading UNFILLED ORDERS from being printed in the body of the page.

   In the following example, one group has a **subheading** for unfilled order details and we want this subheading to appear only the first time that the group is printed on the page:

```
          SPORTS RETAIL STOCK SUMMARY
ITEM                    QTY IN STOCK
GOLF 5 IRON                      3
SQUASH RACKET                   20
TENNIS SOCKS                     4
     UNFILLED ORDERS: NAME       QTY      DATE
                      SIMKINS     10    JUL 01
                      MABBOT       6    AUG 20
SWIMMING TRUNKS                 18
RIDING HAT                       0
                      ADRIAN      1    JUN 20
```

```
01   UNFILLED-ORDER   TYPE DE.
  03   LINE + 1          PRESENT AFTER NEW PAGE.
    05   COLS 6 22 33 40  VALUES "UNFILLED ORDERS:" "NAME" "QTY" "DATE".

  03  LINE + 1.
    05  COL 22          PIC X(10)     SOURCE NAME.
    ... etc ...
```

5. If you write **PAGE OR control-id** (this order can be reversed), the field will be produced if **either or both** conditions arise. For instance, you might want the YEAR-NO and SEASON fields in the examples above (see above) to be printed again at the start of a new page even though there may have been no change. In this case, you must write:

```
05    ... PRESENT AFTER NEW YEAR-NO OR PAGE
05    ... PRESENT AFTER NEW SEASON-NO OR PAGE
```

6. There may be a field, line, etc. that you would like produced the **first** time only. To accomplish this, use **PRESENT AFTER NEW REPORT**. (REPORT or FINAL is the highest control level and is always assumed even if not coded in the CONTROL clause.) In the next example, it is in the PAGE HEADING:

```
          ** START OF REPORT **
UNPAID SUBSCRIPTIONS                              PAGE   1
```

```
UNPAID SUBSCRIPTIONS                              PAGE   2
```

```
UNPAID SUBSCRIPTIONS                              PAGE   3
```

```
01  TYPE PH.
  03  LINE + 1    PRESENT AFTER NEW REPORT.
    05  COL 15    VALUE "** START OF REPORT **".
  03  LINE + 1.
    05  COL 2     VALUE "UNPAID SUBSCRIPTIONS".
    ... etc ...
```

To *anchor* the vertical starting line of this relative group, you may include a HEADING sub-clause in your RD.

7. If you write **ABSENT** instead of PRESENT, the clause will have exactly the opposite effect. In other words, the field will be produced whenever it would have been ignored and vice versa. In the next example, we use it to produce a "*(CONTINUED)*" message in our PAGE HEADING. It will appear on every page except the **first** page after each new control value. (This message is also useful in CONTROL HEADING groups.)

```
PAGE 1                              AREA 1

PAGE 2                              AREA 1    (CONTINUED)

PAGE 3                              AREA 2
```

```
01  TYPE PH   LINE 60.
    05  COL 1    "PAGE:".
    05  COL + 2  PIC <999     SOURCE PAGE-COUNTER.
    05  COL 90   "AREA:".
    05  COL 96   PIC 9   SOURCE AREA-NO.
    05  COL 100  "(CONTINUED)" ABSENT AFTER NEW AREA-NO.
```

8. If there is an OCCURS clause, or a multiple LINES or COLUMNS clause, in the same entry, the PRESENT AFTER applies to the entire **set** of repetitions, so the occurrences are either **all** present or **all** absent. (Compare **GROUP INDICATE** immediately below.)

9. **GROUP INDICATE** behaves differently from the equivalent PRESENT AFTER clause if it is subject to OCCURS. As soon as the **first** occurrence of the GROUP INDICATE item has been output, the GROUP INDICATE is *switched off*. Hence the GROUP INDICATE clause only enables **one** entry to be output (the leftmost of topmost, depending on the axis), whereas PRESENT AFTER affects each occurrence equally and is switched off only when the whole table has been output. This fact can be put to practical use if you want some text to appear with the first entry only:

```
ADDRESS:    345 MERMAID STREET
            RYE
            SUSSEX
            ENGLAND
```

```
01  ADDRESS-GROUP     TYPE DE.
  03  LINE   OCCURS 10 TIMES   VARYING R-LINE
      ABSENT WHEN ADDR-LINE (R-LINE) = SPACES.
    05  COL 1     VALUE "ADDRESS:"   GROUP INDICATE.
    05  COL 11    PIC X(32)  SOURCE ADDR-LINE (R-LINE).
```

(Note that if you want "ADDRESS:" to be printed again each time ADDRESS-GROUP is GENERATEd you need to ensure that a control break occurs on each GENERATE of ADDRESS-GROUP.) Using **GROUP INDICATE** in this example is better than coding **PRESENT WHEN R-LINE = 1**, since the latter will not work here if the first occurrence of ADDR-LINE might contain spaces.

10. If you use the PRESENT AFTER clause at the 01-level of a DETAIL group:

```
01   DETAIL-GROUP TYPE DE   PRESENT AFTER NEW BRANCH-NO.
...
```

and you require this group to appear as soon as there is a change to the control BRANCH-NO, your program should GENERATE this group before every other GENERATE for the report. In spite of any appearance to the contrary, you may rest assured that the PRESENT AFTER clause will not make a group appear if your program does not GENERATE it.

### 3.17.4 Compatibility

1. Only new Report Writer provides the PRESENT/ABSENT AFTER clause.

2. New Report Writer allows GROUP INDICATE to appear at **any** level - not only at **elementary** level.

# 3.18 PRESENT WHEN clause

This clause places a *general COBOL condition* on any report entry. By evaluating the condition, report writer determines whether your entry is to be **output** as normal or **skipped**.

### 3.18.1

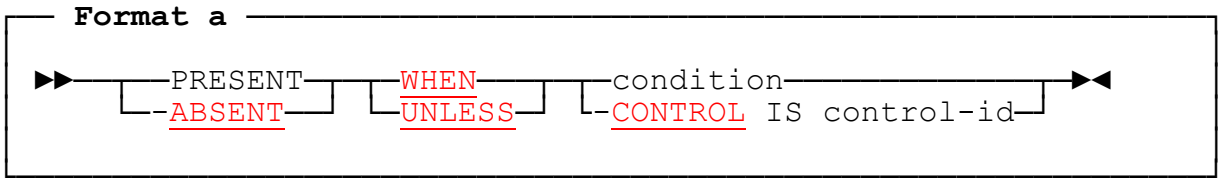


### 3.18.2 PRESENT/ABSENT WHEN Clause: Coding Rules

1. The *condition* may be **any valid COBOL conditional expression**. You are not restricted to simple conditions. For example, the following compound condition is quite acceptable:

```
PRESENT WHEN SALARY > 20000 AND (AGE < 20 OR MARITAL-STATUS = "M" OR "D")
```

   Each of the data items you use in your *condition* may come from any COBOL *SECTION* (but see the note *Use of Total Fields* in 3.23.4 if you use SUM fields from the REPORT SECTION itself). You may optionally place *parentheses* "( )" around the whole conditional expression for clarity. The symbols ">=" (*greater than or equal to*) and "<=" (*less than or equal to*) are allowed. For more information, you should refer to your COBOL language reference under *conditional expressions*, for a list of the many varied ways of forming COBOL conditions.

2. The *CONTROL IS control-id* form if allowed only if the current group is a **multiple CONTROL FOOTING**, that is, one with a TYPE CONTROL FOOTING clause with **more than one** *control-id* operand, or TYPE CONTROL FOOTING FOR ALL.

3. The keyword **PRESENT** is implied if omitted. Experience has shown that your code will be clearer if you include the PRESENT keyword in the **single** form of the clause but omit it in the **multiple-choice** form described below and in the following example:

```
05 COL 11  PIC ZZ9  VALUE "OVER LIMIT"  PRESENT WHEN AMT > 100.
05 COL 21          VALUE "BLACK"       WHEN IND = 1
                   VALUE "RED"         WHEN IND = 2
                   VALUE "WHITE"       WHEN OTHER.
```

4. The keyword **ABSENT** gives the clause the exact opposite meaning from the **same** clause with PRESENT; *ABSENT WHEN condition* is equivalent to *PRESENT WHEN* **NOT** *(condition)*. So you may find it more expressive to write:

```
ABSENT WHEN AGE < 21 AND LOCN = "NY"
```

rather than:

```
PRESENT WHEN AGE NOT < 21 OR LOCN NOT = "NY".
```

Whenever we refer to the *PRESENT WHEN clause*, you can assume that this term includes the *ABSENT WHEN* form.

5. **PRESENT UNLESS** is an older syntax, synonymous with **ABSENT WHEN**.

6. You may write these clauses in **any** report group entry other than the *RD* itself. An entry that has a PRESENT WHEN clause is often referred to as a *conditional* entry. The same field may be subject to any number of PRESENT WHEN clauses at any number of different levels. The following sample group has one of the clauses in all the possible positions:

```
01   TYPE PH   ABSENT WHEN PREPRINTED = "Y".       *>group level
  03   LINE 2.
    05   COL 20     "HACKNEY BEAUTY SUPPLIES".
    05   COL 60     "END OF YEAR"
           PRESENT WHEN THIS-MONTH = 12.           *>elementary level
  03   PRESENT WHEN FILE-END = "N".                *>group of lines
   04   LINE        "AMOUNT              DATE".
   04   LINE        PRESENT WHEN LAST-YEAR = "Y".  *>LINE level
    05   COL 1      "LAST YR           LAST YR".
    05   ABSENT WHEN YEAR-NO = ZERO.               *>group of columns
     06   COL 50   "YEAR:".
      06   COL +2   PIC 9999     SOURCE YEAR-NO.
```

7. If you *nest* more than one PRESENT WHEN clause by writing one clause in a higher entry and another in a lower entry beneath it, as in the preceding example, the **outer** condition takes precedence over the **inner** condition. It is up to you to ensure that both conditions can be true at the same time. Report writer will not check for contradictory combinations of conditions such as:

```
03   LINE 1                PRESENT WHEN A = 1.
  05   COL 5   "X"    PRESENT WHEN A = 2.
```

Here, if A is not 1, the whole LINE will not be output and that is an end to the matter: the test for A = 2 is short-circuited and the "X" will never be output.

### 3.18.3 PRESENT/ABSENT WHEN Clause: Operation

1. Report writer tests the *condition* operand of your **PRESENT WHEN** clause each time it **begins** the processing of the report group. If the *condition* is **true**, the field is output normally. If the condition is **false**, the entry is **ignored**. (For **ABSENT WHEN** , this rule applies *vice versa*.) If the entry is a **group entry**, all the entries **beneath** it, including all its elementary entries, are also ignored. **When report writer "ignores" your entry, it treats the entry, for that instant only, as though you had not coded it.** Imagine the entry drawn in a rectangle of paper and imagine that you have a blank card that you can place over the rectangle to "mask" it out:

```
03   LINE 3.
  05  COL 1 PIC X(6) SOURCE CITY
      PRESENT WHEN CITY-FLAG = 1.
  05   COL 8   PIC XXX SOURCE REGN.
  05  ABSENT WHEN INS-FLAG = 0.
    07  COL 13     "POLICY NO.:".
    07  COL 25     PIC X(20)
        SOURCE POLICY-NO.
  05   COL 50 PIC X(20) SOURCE NAME.
```

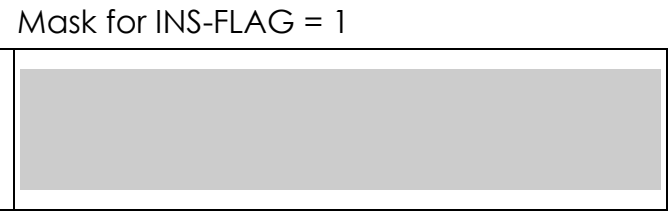


Remember, when the PRESENT WHEN is **not** on an **elementary** entry, your masking "card" must be large enough to cover **all the lower-level entries**, down to elementary level, as far as the next entry at the same level or higher. Now, to find out what will be produced when an entry is *ABSENT,* just cover the entry with the mask, so that it disappears from view. The remaining entries are what report writer "*sees*" at that instant, and therefore what it will output. For example, suppose that the field CITY-FLAG is 1 and INS-FLAG is zero in the example above. What will report writer produce? Just move the mask over the INS-FLAG group entry, as shown above, and this is what results:

```
03   LINE 3.
  05   COL 1   PIC X(6)   SOURCE CITY.
  05   COL 8   PIC XXX    SOURCE REGN.
  05   COL 50  PIC X(20)  SOURCE NAME.
```

Keeping this simple principle in mind, consider the practical applications described in the following paragraphs:

2. To "*blank out*" a field with an **absolute** COLUMN, place your PRESENT WHEN on the absolute COLUMN entry and follow it with **another absolute** COLUMN entry:

```
03   LINE 4.
  05   COL 4     PIC ZZZ9   SOURCE HOUSE-NUMBER
                 PRESENT WHEN HOUSE-NO-FLAG = 1.
  05   COL 10    PIC X(20) SOURCE STREET-NAME.
```

If HOUSE-NO-FLAG is not 1, the entry in column 4 **disappears**. Because the following column is in an **absolute** position, the first entry is blank:

```
    22   LONDON ROAD

         DARK LANE

         ↑   no house number
```

This method also enables you to *blank out* an absolute **LINE** entry from a set of absolute LINE entries, leaving a gap in the printed output.

3. To **insert** a conditional field into the report line so that it **displays** the fields that follow, simply make the entries that follow **relative**:

```
01  AMOUNT-LINE     TYPE DETAIL          LINE + 1.
    05  COL 13  VALUE "DEBIT " PRESENT WHEN AMOUNT < ZERO.
    05  COL +1         PIC 9<9(6)            SOURCE AMOUNT.
```

```
1056
532
                DEBIT 12
21
                DEBIT 250
```

When triggered by the PRESENT WHEN, the field in COLUMN 13 displaces the relative field that follows rightwards.

The word **DEBIT** displaces the next field to the right because the next field has a **relative** COLUMN clause (COL +1). Place your "*mask card*" over the **DEBIT** entry and you will see what occurs when its group is not produced: the AMOUNT field is the first and only field to be produced, and its COLUMN number is +1. It therefore appears in column **1**.

Similarly, the HOUSE-NUMBER field in the previous paragraph could be treated as a conditional insertion item by revising the code as follows. (The "<" symbol eliminates the gap after short HOUSE-NUMBERs.)

```
      03   LINE 4.
        05   COL 2.
    *COL 4 can be coded here instead of COL +2:
        05   COL +2   PIC <9999 SOURCE HOUSE-NUMBER
                       PRESENT WHEN HOUSE-NO-FLAG = 1.
        05   COL +2   PIC X(20) SOURCE STREET-NAME.
```

This time, if **HOUSE-NO-FLAG** is not 1, there is no "*gap*" because the item that follows is **relative**.

```
      22 LONDON ROAD

      DARK LANE
            ↑   no house number, but this time no gap
```

4. To place **one of a series** of alternative entries into the **same** column positions, code several entries, each with a PRESENT WHEN clause.

   Take care that the conditions are mutually-exclusive so that none of the fields can overlap:

```
05  COL 1   PIC X(16)   SOURCE SURNAME.
05  COL 21  VALUE "MINOR"      PRESENT WHEN AGE < 16.
05  COL 20  PIC ZZ9 SOURCE AGE PRESENT WHEN AGE > 15 AND < 65.
05  COL 18  VALUE "OLD TIMER"  PRESENT WHEN AGE > 64.
```

```
GOLIGHTLY            27
THOMPSON           MINOR
PREWITT          OLD TIMER
```

   Notice that the conditional fields need not all start in the same column and that the column numbers need not be strictly in sequence, provided that they **are** in sequence when we **mask out** the entries that are *ABSENT*.

   If **all** your entries start in the **same column** and are all *literals* or *identifiers* with the same *PICTURE*, you will find it more convenient to use a **multiple-choice** entry. (See 3.18.5 *The Multiple-Choice Form*, below.)

   You can also use the technique shown here to choose one **LINE** from a set of **alternative absolute LINE** entries.

5. To *string out* (concatenate) a number of conditional fields along the report line, where any combination could be present, use a series of **relative** conditional entries:

```
  NAME            ... SPORTS PLAYED ...
JENKINS        RUGBY TENNIS GOLF SWIMMING
LLOYD          GOLF
BURKE          TENNIS SWIMMING
```

```
01  TYPE PH  LINE 1    "   NAME                          ... SPORTS PLAYED ...".
01  SPORTS-LINE   TYPE DE              LINE + 1.
    05   COL 1       PIC X(12)         SOURCE NAME.
    05   COL 14.
    05   COL + 2   VALUE "RUGBY"       PRESENT WHEN RUGBY-FLAG = "Y".
    05   COL + 2   VALUE "TENNIS"      PRESENT WHEN TENNIS-FLAG = "Y".
    05   COL + 2   VALUE "GOLF"        PRESENT WHEN GOLF-FLAG = "Y".
    05   COL + 2   VALUE "SWIMMING"    PRESENT WHEN SWIMMING-FLAG = "Y".
```

The *dummy* entry specifying **COL 14** gives you an *anchor point* at which to begin. It ensures that the first sport-field will appear in column 16.

If you include many optional fields using relative COLUMNS, you may run the risk of causing line overflow if a large number happen to be present. If you want report writer to "wrap the data round" on to a continuation line, you **must** code a *WRAP* clause (see 3.28). Otherwise, it will truncate the line and create a run time *line overflow* message.

A similar problem might arise if you define an entry in an **absolute** column following your series of optional entries. If there were too many entries present, report writer might signal a run time *column overlap* error. If there is a risk of line overflow or column overlap, you must do some extra processing before you *GENERATE* the line, to make certain that no more than the maximum number of fields will be present.

6. To print one or more of a series of conditional **lines** in a report group, use **relative LINE clauses** and code your PRESENT WHEN clauses at the LINE level or above:

```
MEMBER:        PHILLIPS              AGE:      34
                 AGE OF SPOUSE:    30
               NO. OF CHILDREN:    3
             BASIC SUBSCRIPTION:   $230
              GOLF SUBSCRIPTION:   $80

MEMBER:        THOMPSON              AGE:      25
             BASIC SUBSCRIPTION:     $290
```

In this example, the lines showing **AGE OF SPOUSE** and **NO. OF CHILDREN** are not to be produced unless there is a "family membership" condition, and the line showing **GOLF SUBSCRIPTION** is not to appear unless the member plays golf. Here is some suitable report writer code:

```
01  MEMBER-RECORD        TYPE DE.
  03  LINE + 2.
    05  COL 1            "MEMBER:"    ... etc ...
  03  PRESENT WHEN FAMILY-MEM-FLAG = "Y".
   04  LINE + 1.
    05  COL RIGHT 30     "AGE OF SPOUSE:".
    05  COL 34           PIC <99  SOURCE SPOUSE-AGE.
   04  LINE + 1         ABSENT WHEN NO-CHILDREN = ZERO.
    05  COL RIGHT 30     "NO. OF CHILDREN:".
    05  COL 34           PIC 9        SOURCE NO-CHILDREN.
  03  LINE + 1.
    05  COL RIGHT 30     "BASIC SUBSCRIPTION:".
    05  COL 34           PIC $9<99    SOURCE BASIC-SUB.
  03  LINE + 1           PRESENT WHEN GOLF-FLAG = "Y".
    05  COL RIGHT 30     "GOLF SUBSCRIPTION:".
    05  COL 34           PIC $9<99    SOURCE GOLF-SUB.
```

Because report writer only "*sees*" the lines that have not been "masked out", it performs a sophisticated **page-fit test**. Report writer will test the availability of only the number of lines that will **actually be output**. If **THOMPSON** in the above example begins on line 59 of a 60-line page, his record **will** appear on that page because at that particular instant the DETAIL group is **actually only 2 lines in depth**.

The form **CONTROL IS** *control-id* is a special condition that can be used only in a PRESENT WHEN clause within a multiple CONTROL FOOTING. It is **true** if the level of the CONTROL FOOTING currently being generated is that of *control-id*. For example, if the TYPE clause is:

```
01   TYPE CF FOR COUNTY, CITY, STREET.
```

you may introduce any amount of variation for each level by coding, for instance:

```
05   PRESENT WHEN CONTROL IS CITY.
  07   COL 1       "Name of city:".
  07   COL +2     PIC X(20)   SOURCE CITY.
```

7. If PRESENT WHEN is used in the **same** entry as an OCCURS clause or a multiple SOURCES or VALUES, the PRESENT WHEN applies to **each occurrence individually**.

### 3.18.4 Effect of PRESENT WHEN on SUM

The general principles of the **PRESENT** (or **ABSENT**) **WHEN** clause apply when you use it with a **SUM** clause or with an item that is **totalled**. Report writer acts according to certain vital principles, as follows:

1. Only those *SUM* operands that were *PRESENT* when they were processed will be added to a total field. An item **will not be added** if it is subject to a **PRESENT WHEN** and the condition is **false**. This means that you may total a series of "*optional*" fields and obtain a total that is **true** in the sense that only the fields that are processed appear in the total field. (The word *processed* includes the case of *unprintable* fields - those having no COLUMN clause - which do not appear in the report.)

   The following example illustrates this principle:

```
     SPORTS CLUB MEMBERSHIP PAYMENT NOTICE
NAME: T.S. ANALYST
   BASIC SUBSCRIPTION:          $25
   PLAYER'S SUBSCRIPTION:       $20
   SQUASH SUPPLEMENT:           $40
          TOTAL DUE PLEASE:     $85

NAME: A.J. CODER
   INITIATION FEE:              $40
   BASIC SUBSCRIPTION:          $25
   PLAYER'S SUBSCRIPTION:       $20
   GOLF SUPPLEMENT:            $150
   SQUASH SUPPLEMENT:           $40
          TOTAL DUE PLEASE:    $275
```

```
01   PAYMENT-NOTICE   TYPE DE.
      ...
   03   LINE            PRESENT WHEN NEW-MEMBER-FLAG = "Y".
     05   COL 4                VALUE "INITIATION FEE".
     05   R-JOIN   COL 31   PIC $$$9     SOURCE   WS-JOIN-FEE.
   03   LINE.
     05   COL 4                VALUE "BASIC SUBSCRIPTION".
     05   R-BASIC  COL 31   PIC $$$9     SOURCE   WS-BASIC-SUB.
   03   LINE            PRESENT WHEN PLAYER-FLAG = "Y".
     05   COL 4                VALUE "PLAYER'S SUBSCRIPTION".
     05   R-PLAYER COL 31   PIC $$$9     SOURCE   WS-PLAYER-SUB.
     ... etc ...
   03   LINE.
     05   COL 11               VALUE "TOTAL DUE PLEASE".
*SUM clause shows total of only the fields that appear in report
     05   COL 30               PIC $$$$9
          SUM OF R-JOIN, R-BASIC, R-PLAYER, R-GOLF, R-SQUASH.
```

2. If you write a SUM clause and a **PRESENT WHEN** together in the same entry, the total will not appear in the report if the entry is not **present** . But **neither will it be cleared to zero**, because **no total is cleared until it has been output**. Values will **continue to be accumulated** in the total field **even though the SUM entry may not always be present**. In other words, the PRESENT WHEN in the SUM entry can delay the generating and clearing of your total field but it has no effect on the totalling itself.

   These facts may be utilized if you wish to generate a number of fields repeatedly but delay the appearance of their cross-foot total. In the following example, we have a variable number (up to 31) of fields, but only up to **five** will fit on a line. The total also occupies a field in the line. The following solution takes advantage of the fact that if a **DEPENDING ON** operand is higher than the maximum, the maximum (in this case 5) is assumed. (This problem can also be resolved now using the **WRAP** clause.)

```
      DONATIONS TO SPORTS MEMORIAL FUND: BY MONTH              1992
 JAN
 DAY   AMOUNT   DAY   AMOUNT   DAY   AMOUNT   DAY   AMOUNT   DAY   AMOUNT
   2     $200     4     $150    11      $50    15      $90    21      $60
  26     $100    28      $60 TOTAL:   $710
 FEB
 DAY   AMOUNT   DAY   AMOUNT   DAY   AMOUNT   DAY   AMOUNT   DAY   AMOUNT
   1     $150     3     $240     7     $120     9     $210    11     $160
  12     $210    14      $40    17      $20    19      $80    23     $180
  24     $210    25      $60    28     $210 TOTAL: $1890
```

```
01   DONATION-SUBHEADS   TYPE DE.
  03   LINE + 2    COL 1        PIC XXX   SOURCE MONTH.
  03   LINE.
    05   COL 3     OCCURS 5     STEP 13   VALUE "DAY   AMOUNT".
01   DONATION-AMOUNTS-LINE     TYPE DE       LINE.
    05   OCCURS 0 TO 5   DEPENDING ON W-ENTRIES-LEFT   STEP 13
  VARYING R-SUB FROM DONATIONS-THIS-MONTH - W-ENTRIES-LEFT + 1.
      07   COL 4   PIC Z9       SOURCE W-DAY (R-SUB).
      07 R-AMOUNT  COL 9   PIC $(4)9   SOURCE W-AMOUNT (R-SUB).
    05   PRESENT WHEN W-ENTRIES-LEFT < 5.
      07   COL + 2             VALUE "TOTAL:".
      07   COL + 1             PIC $(5)9   SUM OF R-AMOUNT.
           ...
PROCEDURE DIVISION.
    ...
    GENERATE DONATION-SUBHEADS
    PERFORM GENERATE-LINE VARYING W-ENTRIES-LEFT
       FROM DONATIONS-THIS-MONTH BY -5 UNTIL W-ENTRIES-LEFT < 0
                  ...
            GENERATE-LINE.
                    GENERATE DONATION-AMOUNTS-LINE.
```

3. To **accumulate a series of totals split up by some category**, that is into separate "*pigeonholes*" or "*buckets*", you may use a series of unprintable SUM fields **partitioned** by a series of mutually exclusive (and exhaustive) PRESENT WHEN condition clauses. Suppose that you wish to print "Sales of Ice Cream" and you want to total separately the sales of *Vanilla*, *Strawberry* and *Chocolate* flavors.

   This is done by splitting up the sales entry **invisibly** into *vanilla*, *strawberry* and *chocolate* sales, as though we were actually splitting it thus at the place where it is printed. We then *SUM* each unprintable entry to form three separate totals:

```
                    ICE CREAM SALES        YEAR 1992

 DATE           FLAVOR               SALES AMOUNT ($)

JAN 01          VANILLA                     1000
FEB 02          STRAWBERRY                 11000
FEB 28          CHOCOLATE                   5500
MAR 12          CHOCOLATE                   4500
APR 03          VANILLA                     6000
 ...            ...                          ...

SUMMARY OF TOTALS BY FLAVOR:

                VANILLA                    32000
                STRAWBERRY                 12500
                CHOCOLATE                  15000
```

```
01   ICE-SALES-LINE       TYPE DE.
  03   LINE.
    05   COL 3            PIC XXXB99       SOURCE SALES-DATE.
    05   COL 18      VALUE "VANILLA" WHEN SALES-FLAVOR = "V"
                          "STRAWBERRY" WHEN SALES-FLAVOR = "S"
                          "CHOCOLATE" WHEN SALES-FLAVOR = "C".
    05   COL RIGHT 47     PIC Z(6)9        SOURCE SALES-AMOUNT.
    05   R-VANILLA        PIC 9(7)         SOURCE SALES-AMOUNT
                 PRESENT WHEN SALES-FLAVOR = "V".
    05   R-STRAWBERRY     PIC 9(7)         SOURCE SALES-AMOUNT
                 PRESENT WHEN SALES-FLAVOR = "S".
    05   R-CHOCOLATE      PIC 9(7)         SOURCE SALES-AMOUNT
                 PRESENT WHEN SALES-FLAVOR = "C".
01   TYPE CF.
  03   LINE + 2  COL 3    "SUMMARY OF TOTALS BY FLAVOR".
  03   LINE + 2.
    05   COL 18           VALUE "VANILLA".
    05   COL RIGHT 47     PIC Z(7)9        SUM R-VANILLA.
  03   LINE.
    05   COL 18           VALUE "STRAWBERRY".
    05   COL RIGHT 47     PIC Z(7)9        SUM R-STRAWBERRY.
  03   LINE.
    05   COL 18           VALUE "CHOCOLATE".
    05   COL RIGHT 47     PIC Z(7)9        SUM R-CHOCOLATE.
```

If you have a larger, or variable, number of categories, it will be easier to defined repeating values and totals using **OCCURS**. Suppose that the flavors *VANILLA*, *STRAWBERRY* etc. are held in a table **W-FLAVOR OCCURS 20**. The following code could now replace the corresponding entries used above:

```
    05   R-SALE  OCCURS 20 TIMES  VARYING R-FLAVOR-NO  PIC 9(7)
                 PRESENT WHEN R-FLAVOR = W-FLAVOR (R-FLAVOR-NO).
    ...
  03   LINE OCCURS 20   VARYING R-FLAVOR-NO.
    05   COL 18   PIC X(16)     SOURCE W-FLAVOR (R-FLAVOR-NO).
    05   COL RIGHT 47     PIC Z(7)9     SUM R-SALE.
```

### 3.18.5 The Multiple-Choice Form

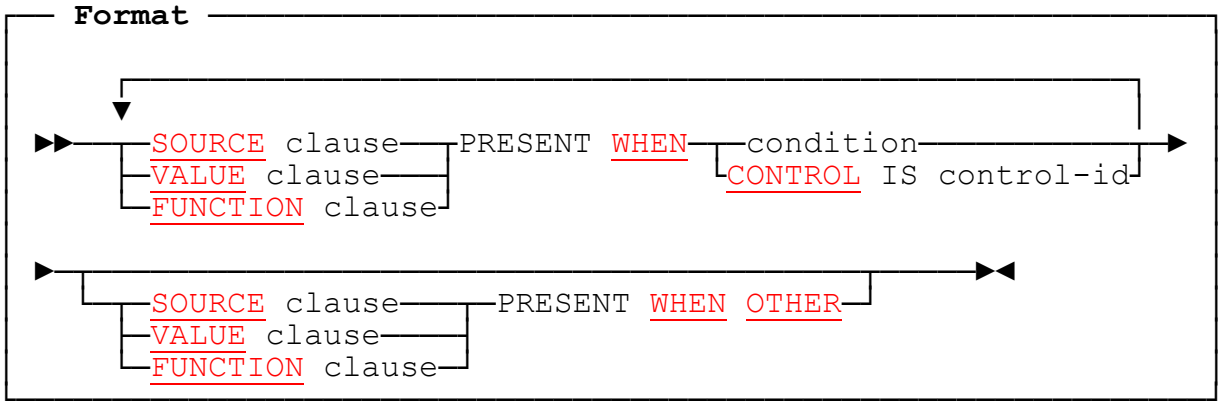


1. If you need to specify a series of **alternative** contents for a particular elementary field, you can do it with a **single** entry, **instead of several separate entries** containing **PRESENT WHEN** clauses. You code the entry with several SOURCE, VALUE, or FUNCTION clauses, each followed **immediately** by a PRESENT WHEN clause. One of the PRESENT WHEN clauses, and only one, may be of the form **PRESENT WHEN OTHER**. It is normally placed **last** in the list (although this is not syntactically required).

2. Report writer scans your *WHEN conditions*, starting with the first in the order of coding, until it finds a condition that is **true**. It then uses the **SOURCE**, **VALUE**, or **FUNCTION** clause preceding that PRESENT WHEN clause and ignores all the remaining PRESENT WHEN and SOURCE, VALUE or FUNCTION clauses. So your conditions need not be mutually exclusive: the testing is on a *"first-come-first-served"* basis. Here is an example:

```
05 COL 23     PIC ZZZ9    SOURCE INCOME WHEN TYP-IND = "A"
                          SOURCE TAX    WHEN TYP-IND ALPHABETIC
                  SOURCE INCOME - TAX  WHEN TYP-IND = "1" OR "2".
```

The contents of **TAX** will be produced when TYP-IND is between "B" and "Z" inclusive.

3. If your conditions do **not** cover all the possibilities, you have three choices:

   a. Put **WHEN OTHER** instead of **WHEN** *condition* against the entry you would like to act as the *catch-all*, *default*, or *wastebasket*:

```
05  COL 25    VALUE "TOO BIG"        WHEN AMOUNT > 99999
              VALUE "TOO SMALL"      WHEN AMOUNT < 100
              VALUE "JUST RIGHT"     WHEN OTHER.
```

   b. Code an **extra "choice"** using **WHEN OTHER** to indicate an error:

```
05   COL 100 VALUE "LONDON"         WHEN CITY-CODE = "LN"
             VALUE "BRISTOL"        WHEN CITY-CODE = "BR"
             ...
             VALUE "UNKNOWN CITY"   WHEN OTHER .
```

c. Leave it as it is. If there is a case not covered by your multiple-choice entry, the **whole field** will then simply be *ABSENT*. For example:

```
05   COL 1    VALUE "DEAR".
05   COL +2   VALUE "MR"          WHEN TITLE-CODE = 1
              VALUE "MRS"         WHEN TITLE-CODE = 2
              VALUE "MISS"        WHEN TITLE-CODE = 3.
05   COL +2   PIC X(20)           SOURCE SURNAME.
```

If **SMITH** has TITLE-CODE equal to **0**, this will result in:

```
DEAR SMITH
```

4. If you specify only *VALUE literal* clauses without a **PICTURE** clause, they may be of different sizes, as in the preceding example. The actual size of the field produced will be that of the chosen value. Since SURNAME above has a **relative** COLUMN, you will obtain:

```
DEAR MR SMITH

or   DEAR MRS SMITH

or   DEAR MISS SMITH
```

5. You cannot repeat the **PICTURE** clause in an entry (nor any of the other clauses other than SOURCE, VALUE, and FUNCTION), so if your choices need different PICTUREs you must usually code a series of separate entries. However, you may still be able to choose a PICTURE that suits each of the choices, such as PIC ZZZ9 to cover both PIC ZZZ9 and PIC ZZ9, and thus still be able to use a single entry with a multiple-choice PRESENT WHEN clause.

6. You **can** form a **SUM** of a *multiple-choice* entry. Report writer will select the correct choice (if any) before adding it to the total:

```
05   PAYMENT   COL 33      PIC ZZZZ9
     AMOUNT - TAX                      WHEN CAT = 1
     AMOUNT - TAX - CALIFORNIA-TAX     WHEN CAT = 2
     AMOUNT - EXPORT-TAX               WHEN CAT = 3.
     ...
05   ... SUM OF PAYMENT ...
```

This adds only the **one** correct choice each time.

7. You can use the *CONTROL IS control-id* form of condition anywhere in a multiple-choice entry. For example:

```
01   TYPE CF FOR STATE COUNTY CITY.
  03   LINE + 2.
    05   COL 1       VALUE "Totals for".
    05   COL + 2     VALUE "state"   WHEN CONTROL IS STATE
                     VALUE "county" WHEN CONTROL IS COUNTY
                     VALUE "city"     WHEN OTHER.
```

8. You can use *multiple* **SOURCE** and **VALUE** clauses within your multiple-choice entry. For example:

```
05   COLS   23   43   64     PIC ZZZ,ZZ9.99
     SOURCES   VAL-1 VAL-2 VAL-3            WHEN TYP = "D"
     SOURCES (- VAL-1) (- VAL-2) (- VAL-3)  WHEN OTHER.
```

9. You cannot place a *multiple-choice* entry at the same level as a LINE clause. The construct:

```
03   LINE 1     COL 1     VALUE "WHITE" WHEN SHADE = 0
                                "BLACK" WHEN SHADE = 1.
```

is therefore **illegal** and must be replaced by:

```
03   LINE 1.
  05   COL 1     VALUE "WHITE" WHEN SHADE = 0
                     "BLACK" WHEN SHADE = 1.
```

### 3.18.6 Compatibility

Only new Report Writer provides the PRESENT / ABSENT WHEN clause.

## 3.19 REPEATED clause

The REPEATED clause arranges body groups **side-by-side** across the page.

### 3.19.1

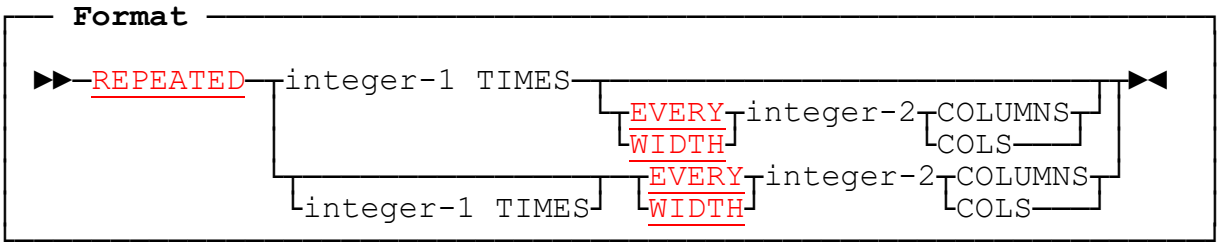


### 3.19.2 REPEATED Clause: Coding Rules

1. Write this clause at the *01*-level of body groups (*DETAIL* or *CH*/*CF*) only.

2. You must code **either** the TIMES phrase **or** the EVERY/WIDTH phrase, or (preferably) both. EVERY and WIDTH have the same meaning.

3. Code **only the left-hand report group**. Report writer will automatically offset successive groups to the right of the left-hand group.

4. If you use the **EVERY/WIDTH** phrase, draw an imaginary **"smallest box"** around your group:

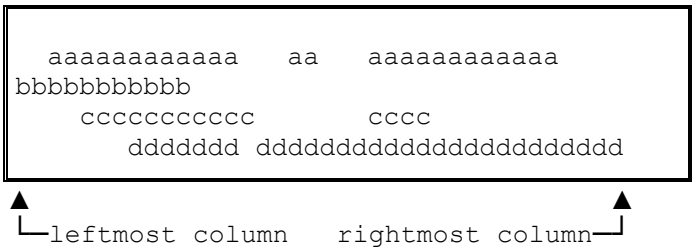


   The width of your box must not be greater than the EVERY/WIDTH *integer-2*. If any of your lines can have a **variable** rightmost column position, you must use the **maximum** expected size while drawing your box, but report writer cannot always predict the actual size at precompilation time. If the actual width of the group then causes it to encroach into the area occupied by the group to its right, a run time error will be issued.

5. There are no other restrictions on the size of your group or the clauses that you can use within it. For example, you may specify any number of LINES.

6. If you omit the **TIMES** phrase, report writer will examine your **EVERY/WIDTH** phrase and calculate how many repetitions of the group it can fit within the LINE LIMIT. If you use the *identifier* form of the LINE LIMIT clause, report writer will do this **dynamically** when you GENERATE the groups.

7. If you omit the **EVERY/WIDTH** phrase, report writer will examine your TIMES phrase and will calculate how **widely** it can space the repeats of your group at **regular** intervals. You cannot use the *identifier* form of the LINE LIMIT clause in this case.

8. The rightmost column of the rightmost REPEATED group must not go beyond the **LINE LIMIT**. This possibility can arise only if you use **both** the **TIMES** phrase **and** the **EVERY/WIDTH** phrase. In all other cases, report writer does the fit for you and makes sure that the repeats will fit side-by-side without violating the LINE LIMIT.

9. The REPEATED clause is not allowed in a report group that has no LINE clauses.

### 3.19.3 REPEATED Clause: Operation

1. If you code a REPEATED clause in a DETAIL group, report writer will place consecutive groups **side-by-side**:

Each instance of the group is produced by **one GENERATE**. For example, to produce the above *3-up* pattern, you would issue **three** successive GENERATEs. Each instance may display different data and may differ from its companions in certain characteristics by virtue of any PRESENT or OCCURS... DEPENDING clauses that you have coded.

2. Report writer sets up a *buffer* to hold your repetitions. If your group is REPEATED **three** times, as in the diagram above, this is what happens:

**First GENERATE**: The group is not produced but is placed in the buffer; the special register REPEATED-COUNTER is set to 1.

**Second GENERATE**: The second group is also not produced but is placed in the buffer; REPEATED-COUNTER is set to 2.

**Third GENERATE**: All three groups are produced side-by-side, with the second and third groups offset by the number of columns given in the EVERY phrase. The buffer is then cleared, ready for the next three groups. REPEATED-COUNTER is reset to zero.

The starting point for the repetitions is given by the COLUMN numbers in your group description. These will become the COLUMN numbers of the left-hand group. The following example shows the effect obtained:

```
01  ADDRESS-LABEL   REPEATED 3 TIMES  EVERY 20 COLUMNS.
  03  LINE + 2.
    05  COL 20          VALUE "xxxx".
    05  COL 26          VALUE "yyyyy".
  03  LINE + 1.
    05  COL 23          VALUE "zzzzzz".
```

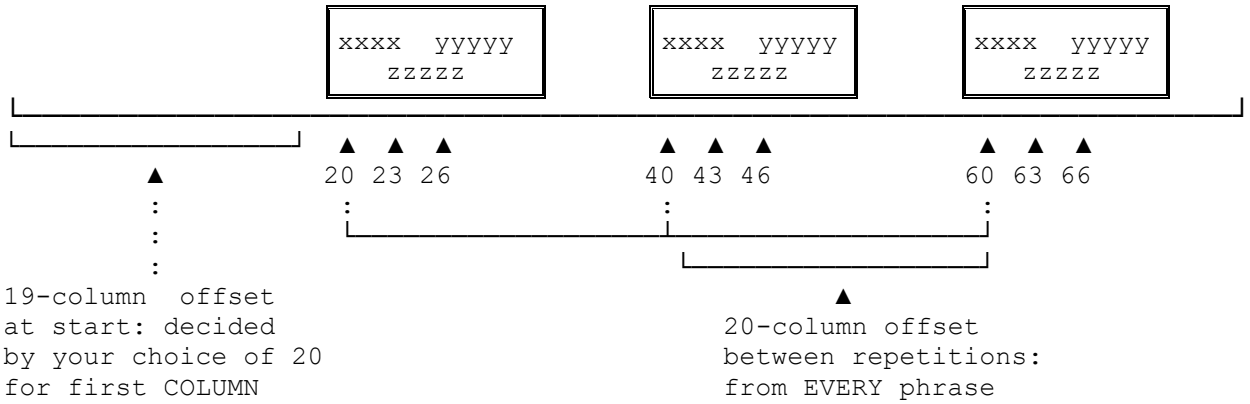


3. If a **different** body group is produced, no more groups are placed side-by-side and **any groups already in the buffer are output**. Any unused repetitions will result in **blanks** on the right-hand side. The effect of writing:

```
INITIATE report
GENERATE group-A
GENERATE group-A
GENERATE group-A
GENERATE group-A
GENERATE group-A
GENERATE group-B
TERMINATE report
```

is shown in the following:

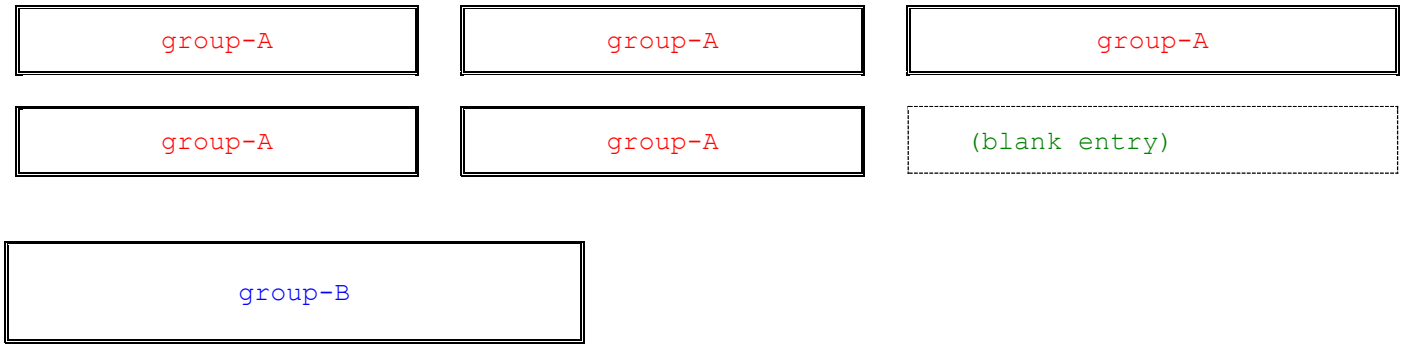


where group-A and group-B are **DETAIL** groups and A is **REPEATED 3 TIMES**.

Group B may **also** be REPEATED, but even if it is also REPEATED 3 TIMES, it will **not** be printed alongside group A, but will start a **new series of repetitions**. The same effect is seen if your program issues a **TERMINATE** when there are groups still in the buffer. report writer will first produce them with blank unused entries on the right, so that no data will be lost.

4. If you need to have **different** groups placed side-by-side, you will have to define a **single** group and use the **PRESENT WHEN** clause above several LINE entries to create the impression of different groups at run time.

5. If a *control break* occurs that results in a **CONTROL HEADING** or **CONTROL FOOTING** group, it has the same effect as when you GENERATE a different DETAIL group. That is to say, any groups in the buffer are first output. This is true even if your CONTROL group is a *dummy* (with no LINE clauses to cause output). Briefly, **your groups always appear in chronological order**.

6. If a clause in your group references **LINE-COUNTER** (in a condition or as a SOURCE), you will always obtain its correct effective value. report writer updates LINE-COUNTER just as though the group were actually being output, although the group is being placed in a buffer in memory. Then, when the next group is GENERATEd, LINE-COUNTER immediately reverts to the value it had at the start of the preceding group.

7. The page-fit test is applied to **each** repetition in turn. So, if your REPEATED group has a depth that may vary (because of a **PRESENT WHEN** clause or an **OCCURS...DEPENDING** at LINE level), room must exist for the **largest** group that has been GENERATEd in the current "pass" across the line.

8. You may place a REPEATED clause in a CONTROL HEADING or CONTROL FOOTING group, but this is of no use except when you use *summary reporting* (GENERATE report-name), because there is no other way that the same CONTROL HEADING or CONTROL FOOTING group can appear twice in succession.

### 3.19.4 Compatibility

The REPEATED clause is unique to new Report Writer.

## 3.20 SIGN clause

The SIGN clause enables a **printable sign character** to be produced automatically when the PICTURE has an **"S"** symbol.

### 3.20.1

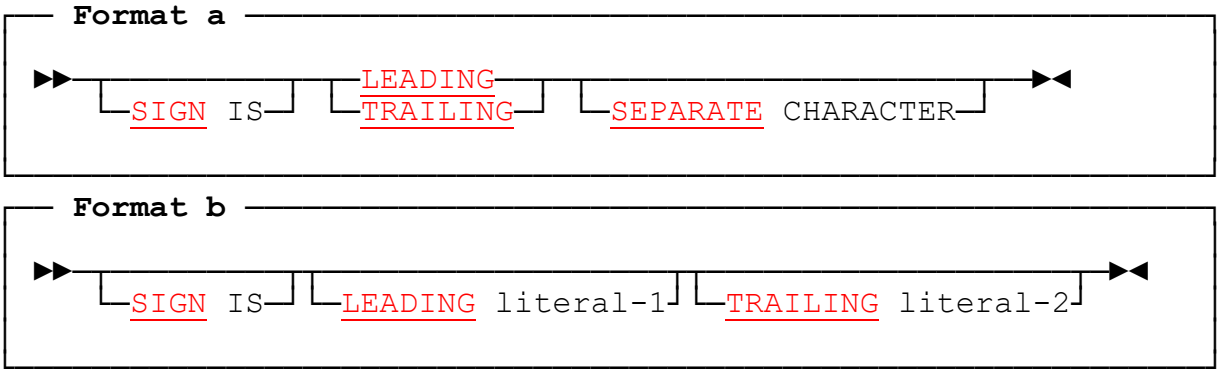


### 3.20.2 SIGN Clause: Coding Rules

1. If you write a SIGN clause in an **elementary** entry, the entry must have a numeric PICTURE with an "**S**" symbol.

2. This clause acts on elementary fields, but you may also code it in a **group** level entry, where it applies to all numeric elementary entries within the group whose *PICTUREs* begin with the "S" symbol.

3. *Format b* is unique to the REPORT SECTION. Each literal must be a single character non-numeric literal. At least one of the phrases must be present.

### 3.20.3 SIGN Clause: Operation

1. The use of the *format a* SIGN clause has been superseded by the "+" and "-" symbols of the PICTURE clause. It is included for consistency with basic COBOL standards. Refer to your COBOL language reference for further information.

2. The *format b* SIGN clause enables you to place symbols of your choice on the left or the right of any signed printed item to represent a **negative** amount. The **LEADING** *literal* (if specified) is placed immediately before the first character of the report field. If leading spaces are suppressed with the *Z* or *floating currency* symbol, the literal is placed immediately before the first non-space character. The **TRAILING** *literal* (if specified) is placed in the last character position. For example, to place parentheses around a negative payment (a common accounting requirement), you would code:

```
PIC SZZZ9  SIGN IS LEADING "(" TRAILING ")"  SOURCE PAY
```

which would output a value of -12 as: (12)

while a value of -1234 appears as: (1234)

This feature can be made to work for **positive** values by specifying the negative of the source (**SOURCE (- PAY)** in the case above).

### 3.20.4 Compatibility

The use of the SIGN clause in the report section is allowed only by new Report Writer, which uniquely provides the LEADING literal TRAILING literal phrases.

# 3.21 SOURCE clause

This clause specifies the *source* field (or *expression*) that provides the contents of a field in your report. The source field is usually outside the REPORT SECTION, but may also be implicitly defined within it.

## 3.21.1

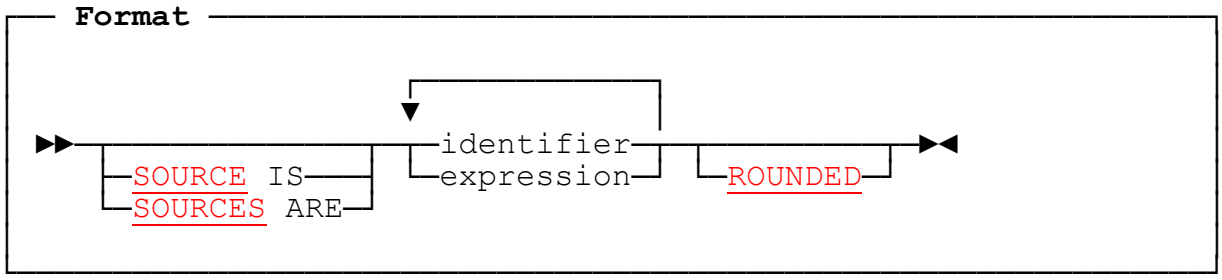


## 3.21.2 SOURCE Clause: Coding Rules

1. Any valid COBOL *identifiers* or *arithmetic expressions* may be used as operands, including any COBOL term that may be the source item of a **MOVE** or **COMPUTE**; for example, report writer special registers such as PAGE-COUNTER, GLOBAL or EXTERNAL items, and special compiler registers such as LENGTH OF.

2. Each operand may be **subscripted and/or qualified** if necessary. For example:

```
SOURCE IS MIN-STOCK IN MAIN-RECORD (AREA-NO, DISTRICT-NO)
```

   The operand may have as many **qualifiers**, **subscripts** or **indexes** as are normally permitted for the subject of a **MOVE** statement. **Relative subscripting** and **reference modification** may be used.

3. You **must also code a** PICTURE clause in the same entry (unlike VALUE, which need not have a PICTURE). The PICTURE used must be *compatible* with the PICTURE of the operand(s). If you are in any doubt, look at the description of the *identifier* where it is originally defined in the FILE, WORKING-STORAGE or LINKAGE SECTION of your program. Ensure that its PICTURE is **unedited** and that you are not attempting to produce a **COMPUTATIONAL** field from a PICTURE X format. The two PICTUREs may be of unequal length, in which case there will be truncation or space-filling on the **right** (for a non-numeric field) or truncation or zero-filling on the **left** (for a numeric field). The rules for the SOURCE statement are exactly those of the MOVE or COMPUTE statements of procedural COBOL.

4. The **SOURCE IS** and **SOURCES ARE** keywords may be omitted, except when immediately following a VARYING clause. We shall still refer to the clause as a *SOURCE clause*, however.

5. An *expression* may be any arithmetic expression containing any of the following symbols and keywords:

   **+** for addition
   **-** for subtraction
   ***** for multiplication
   **/** for division
   ****** for forming an exponent
   **(** and **)** to prioritize evaluation or to "structure" the code for documentation
   **SUM** for a total (automatically reset to zero after output)
   **COUNT** to show the number of times another REPORT SECTION item has appeared (also reset to zero after output)

   In addition, the expression may have any number of identifiers, and these may be subscripted or qualified. Here are some examples of expressions:

```
SOURCE IS NUMBER-ORDERED * UNIT-PRICE / 100
SOURCE IS ((SUM OF REP-SALARY) / NUMBER-IN-DEPARTMENT (DEPT-NO))
```

   The **rules** for forming an **expression** are exactly as for the COBOL *PROCEDURE DIVISION*, as described in your COBOL language reference. For more information, see 3.23 *SUM clause*. The effect of a potential zero divide or size error depends on the choice of action on overflow. (See 2.8 *OVERFLOW clauses*.)

6. The **ROUNDED** phrase may be used in the same entry if you use a numeric PICTURE that has fewer digits to the right of the decimal point than the **SOURCE** *identifier*. It will ensure that the value produced is the numerically closer of the two possible values, instead of always truncating the unwanted digits. You can use **ROUNDED** with a single identifier as well as with an expression. (So you need **not** code "+ 0" for ROUNDED to be legal.) In the following example:

```
    05   COL 20      PIC 999    SOURCE SALARY   ROUNDED.
```

   if SALARY contains 100.50 or 100.60 or 100.99, the value produced will be 101, not 100.

   For more details of the ROUNDED keyword, see in your COBOL language reference under the **COMPUTE** verb. ROUNDED is a clause in its own right and thus may be written at any location in the entry. If you have a *multiple* form of the SOURCE clause, or more than one such clause (see 3.21.4 *Multiple SOURCES*), ROUNDED will affect all of them wherever applicable.

7. You can indicate a multiple-choice entry by appending **WHEN** or **UNLESS** *condition* to the SOURCE clause, and then coding further consecutive pairs of SOURCE and WHEN/UNLESS clauses in the same entry (see 3.18.5 *The Multiple-Choice* Form).

### 3.21.3 SOURCE Clause: Operation

1. Rules for Generating Report Field

   The effect of the **SOURCE** clause is best described by reference to the COBOL **MOVE** or **COMPUTE** statements, because it obeys identical rules:

| Form of SOURCE clause | Equivalent procedural statement |
|---|---|
| identifier (without ROUNDED) | MOVE identifier TO report-field |
| identifier ROUNDED | ADD ZERO, identifier GIVING report-field ROUNDED |
| arithmetic-expression (without ROUNDED) | COMPUTE report-field = expression |
| arithmetic-expression ROUNDED | COMPUTE report-field ROUNDED = expression |

   The *special registers* **CURRENT-DATE** and **TIME-OF-DAY** of *OS/VS COBOL* and *DOS/VS COBOL* make use of the conceptual data items DATE and TIME.

   If the report field has **"<"** PICTURE symbols, or begins in a variable position, report writer will not store the result directly in the report field, but will use an *intermediate area*.

2. Reference to controls

   If the SOURCE clause refers, directly or indirectly, to a *CONTROL* operand, and the SOURCE is fetched **at CONTROL FOOTING time**, the contents of the control *identifier* **before the control break** will be used. This means you will obtain *before-the-break* contents for your control fields in the following report groups:

   a. In every CONTROL FOOTING;

   b. In the PAGE FOOTING and PAGE HEADING, if the page advance was caused by a CONTROL FOOTING group.

   This rule applies whether the **CONTROL** operand is used as a SOURCE by itself, or as a subscript, or as part of an expression. It also applies if you refer to the **CONTROL** operand via a **redefinition**, or via a **group field** that contains it, or a **subordinate** field. This is because the pre-break values are **temporarily stored directly back in the control fields** outside the REPORT SECTION while CONTROL FOOTING processing is being done.

   One important consequence of this rule is that, if you use fields defined under an *FD* in the **FILE SECTION** as controls, your program must **not** execute any report writer statements - not even a TERMINATE - **after the input file** releases the buffers. The correct order for "close down" is therefore:

```
TERMINATE report
CLOSE all report files and input files
```

   See 2.6 *CONTROL clause*, and 4.2 *GENERATE statement* for further details.

### 3.21.4 Multiple SOURCES

If you use the *multiple* form of the **SOURCE** clause by writing **more than one** *identifier* or *expression* after the keyword, you will avoid the effort of coding several separate entries. Note the following:

1. You may include the keyword **NONE** to indicate that a particular field is to have **no** contents stored in it. It is then treated as *ABSENT*. An example of the use of NONE will be found under the **LINE** clause (see 3.10.4 *Multiple LINES Clause*).

2. Your entry must be subject to **at least one** of the following:

   a. A **fixed OCCURS** clause (not OCCURS...DEPENDING), or

   b. A **multiple LINES** clause, or

   c. A **multiple COLUMNS** clause.

3. The number of terms in your multiple SOURCES must equal the total number of repetitions the entry is subject to in **all** dimensions, or the number of repetitions of one or more of the **inner** dimension(s). For example, with the following layout:

```
03  LINE OCCURS 4.
 04  OCCURS 3.
  05  COLS +2, +1     PIC...     SOURCES ARE .....
```

   The number of SOURCES should be either 2 (just the inner dimension), 6 (the product of the inner two dimensions), or 24 (all the repetitions).

4. If the terms cover more than one dimension, they are distributed along the innermost dimension, periodically stepping to the next entry in the outer dimension(s). For example:

```
03  LINE 2   STEP 1   OCCURS 3.
  05  COL 2  STEP 5   OCCURS 4   PIC XXX     SOURCES ARE
    MONTH-NAME(1)  MONTH-NAME(2)  MONTH-NAME(3)  MONTH-NAME(4)
    MONTH-NAME(8)  MONTH-NAME(6)  MONTH-NAME(7)  MONTH-NAME(5)
    MONTH-NAME(9)  MONTH-NAME(10) MONTH-NAME(11) MONTH-NAME(12).
```

   will result in:

```
JAN   FEB   MAR   APR
AUG   JUN   JUL   MAY
SEP   OCT   NOV   DEC
```

   This technique is useful when your SOURCE items are not already conveniently arranged in a table or when, as in the case above, the order is **irregular**.

5. If there are two or more dimensions and the number of terms matches only the inner dimension(s), the terms are *recycled* from the first SOURCE operand for each repetition of some outer dimension. For example, in the following case:

```
        03  LINE OCCURS 4.
            05  COLS 1, 6, 11  PIC... SOURCES ARE JAN, FEB, MAR.
```

the values of JAN, FEB and MAR will be repeatedly stored in each line. However, you may vary the contents actually stored by allowing a **VARYING** operand to advance in step with each occurrence of the outer dimension and by using it as a subscript in the lower-level entry:

```
03   LINE OCCURS 4      VARYING LINE-SUB.
  05   COLS 1, 6, 11      PIC...     SOURCES ARE
 QTR-MO-1 (LINE-SUB), QTR-MO-2 (LINE-SUB), QTR-MO-3 (LINE-SUB ).
```

6. If a **ROUNDED** phrase is present in the entry, **every** SOURCE item will be rounded.

7. The multiple SOURCES may be used as one or more of the alternatives within a multiple-choice entry. You need not use a multiple SOURCES in every alternative:

```
05   COLS 1, 12, 25                PIC ZZ,ZZZ,ZZ9
     SOURCES BASIC-AMOUNT TAX EXTRA  WHEN REBATE-FLAG = "N"
             (- BASIC-AMOUNT) (- TAX) (- EXTRA)  WHEN OTHER.
```

8. You may **omit** the *SOURCE* keyword, except when immediately following a VARYING clause.

9. Other examples of the multiple SOURCES clause will be found under 3.4.4 *Multiple COLUMNS Clause* and 3.10.4 *Multiple LINES Clause*.

### 3.21.5 Compatibility

All aspects of the following features are unique to new Report Writer:

- SOURCE keyword being optional,
- Arithmetic-expression format,
- ROUNDED phrase,
- Use of SUM or COUNT term as operand,
- Multiple format,
- Multiple-choice format.

# 3.22 STYLE clause

This clause enables the program to make use of any **special effects** provided by the printer or output device.

## 3.22.1

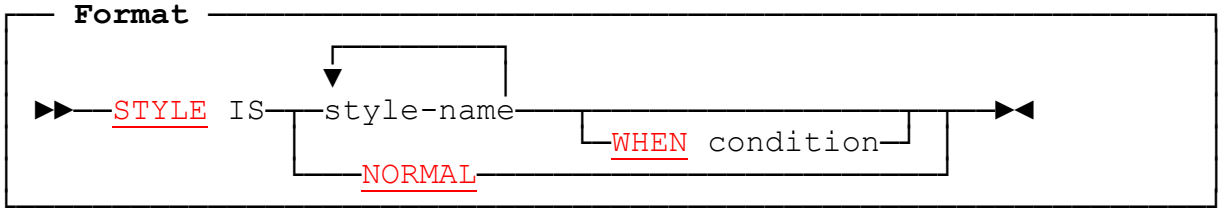


## 3.22.2 STYLE Clause: Coding Rules

1. **STYLE** may be coded at any level, including in the FD (see 2.2 *Report Files*) or RD (see 2.3 *REPORT SECTION and RD*). The *WHEN condition* phrase cannot be used in the FD or RD entry. STYLE cannot be used if the *device-name* of the corresponding file is **NONE** (see 2.2.2 rule 11 above).

2. **NORMAL** may be coded instead of a *style-name*, meaning that no special effect is to be produced. It must be the only *style-name* in the clause and there must not be a WHEN condition phrase.

3. Apart from **NORMAL**, each style-name names a *style* or *special effect* that must be obtainable from the output device. The type of output device in use is given in the **TYPE** phrase of the **SELECT** statement. The *style-names* available are either predefined or user-defined for the particular output device. This check, and the processing of the styles themselves, may be delayed until run time by writing **DEFERRED** in the **TYPE** phrase. This enables the program to run, in theory, with a variety of different output devices, even when they are widely dissimilar. For a mainframe, special device handling is usually the province of a user-written report file handler - see *Installation and Operation*. For example, **STYLE HIGHLIGHT** might be implemented by any of the following means:
    a. shadow printing,
    b. switching to a different font,
    c. printing in larger letters,
    d. on a screen, by displaying intense,
    e. "double-hammering" on an impact line-printer.

4. The following are standard device-independent *style-names*. The first two are available with every **TYPE** of printer (other than **TYPE NONE**). The last two are available with all printers except the most basic.

    **UNDERLINE** causes the report field to be **underscored**. It is used for headings.

    **HIGHLIGHT** causes the report field to stand apart from the others, normally by appearing in **bold** or **intense**. It is used to give emphasis to certain fields.

**ALT-FONT** causes the report field to appear in a second contrasting font or typeface, such as italic.

**GRAPHIC** causes the report field to appear in a third contrasting font.

The remaining *style-names* used in the examples that follow are purely for the purpose of illustration, and are not necessarily available on any particular device.

5. Style-names are grouped into mutually-exclusive *classes*. Styles **HIGHLIGHT**, **ALT-FONT** and **GRAPHIC** are mutually-exclusive but **UNDERLINE** belongs to a separate (one-member) class. The classes are defined in the Printer Description File. It is not valid to code two styles belonging to the same class in the same entry. Thus the following clause is **not valid**:

```
STYLE IS ALT-FONT GRAPHIC
```

However it is valid to place different members of the same class in **nested** entries, in which case the prevalent style is noted and **restored** at the end of the nested entry. Thus, in the following entries, TOMATO is **RED** while all the other entries are **GREEN**:

```
03  LINE.
  05  STYLE GREEN.
    07  COL 1   PIC X(20)   SOURCE BEAN.
    07  COL 21  PIC X(20)   SOURCE TOMATO   STYLE RED.
    07  COL 41  PIC X(20)   SOURCE ARTICHOKE.
    07  COL 61  PIC X(20)   SOURCE PEA.
```

6. The STYLE clause cannot be repeated in an entry. Hence, if a *multiple-choice* entry is required, with a different STYLE on each choice, separate entries must be coded.

7. If STYLE is used in a report that uses the PAGE BUFFER feature it should not be coded in a Report Group Description at a level higher than the **LINE** level.

8. No *style-name* may be the same as one which is already in effect. For example, the following is **illegal**:

```
05      LINE   STYLE IS ALT-FONT.
  07    COL 1   STYLE IS ALT-FONT UNDERLINE.
```

9. The STYLE clause cannot be used on an **unprintable** elementary entry.

### 3.22.3 STYLE Clause: Operation

1. Report writer implements the STYLE feature in one of **three** ways:

   a. By **inserting non-printable control characters**, or *escape sequences*, into the report data, before or after the data affected, or both.

   b. By **re-printing** a line or part of a line without advancing the carriage. This method is commonly used to **highlight** text and occasionally to produce an **underline** effect.

c. By some special technique chosen and implemented by the user (see *Independent Report File Handlers*).

The method of implementation of each style is defined explicitly for each **TYPE** of device, and may be altered by the user.

2. The **STYLE** clause is *transparent* to the layout of the report. That is, it does not affect any of the other clauses or entries in the report description. For example, **COLUMN** numbers are **unchanged**, even though report writer may be inserting extra control sequences into the report lines. You can therefore simply **add STYLE clauses to enhance existing programs**.

3. Several STYLE names can be combined in one clause, for example:

```
STYLE HIGHLIGHT UNDERLINE
```

Here the different characteristics are simply superimposed on each other (but see next item).

4. The scope of the **STYLE** clause is decided by the level of the entry in which it is coded, thus:

a. In an **elementary** entry, the STYLE clause applies only to the **elementary** field, for example:

```
03  LINE.
  05  COL 1     PIC X(20) SOURCE CUST-NAME.
  05  COL 25    PIC $(5)9.99   SOURCE ACCOUNT-BALANCE.
  05  COL 37    PRESENT WHEN ACCOUNT-BALANCE < 0
                VALUE "IN ARREARS" STYLE HIGHLIGHT.
```

b. In a **LINE** entry, the STYLE clause applies to the **whole line**, as in:

```
03  LINE        STYLE EXTRA-WIDE.
  05  COL 1     "Annual Report".
  05  COL 31    PIC X(40)          SOURCE COMPANY-NAME.
  05  COL 75    PIC "Year: "X(4)   SOURCE ACCOUNT-YEAR.
```

c. In a **report group** entry, the STYLE clause applies to the **whole group**, for example:

```
01  WARNING-NOTICE   TYPE DE   STYLE RED ITALIC.
    ...
```

d. In an *RD* entry, the STYLE clause applies to the **entire report**:

```
RD  PERSONNEL-SHEETS
    STYLE IS LANDSCAPE.
```

If any control characters are output, this happens during the execution of each **INITIATE** or **TERMINATE** for the report, or both.

e. In an *FD* entry, the STYLE clause applies to the **entire report file**:

```
FD  REPORT-FILE
    REPORT IS PERSONNEL-SHEETS
    STYLE IS LOAD-COURIER-FONT-1 LOAD-HELVETICA-FONT-2
             SWITCH-ON-SWITCH-OFF.
```

If any control characters are output, this happens during the execution of each **OPEN** or **CLOSE** for the file, or both.

5. The WHEN clause causes the STYLE to take effect only when the condition is true, for example:

```
03  LINE + 2  STYLE LARGE  WHEN WS-PAPER-WIDTH > 80.
  05  COL 21  PIC ZZZ9       SOURCE PERCENTAGE
               STYLE UNDERLINE WHEN PERCENTAGE > 100.
```

6. Since you can only code STYLE **once** per entry, you cannot vary the STYLEs in a *multiple-choice* entry, and instead must code separate entries, as here:

```
05  COL 15  PRESENT WHEN W-VAL > 0  VALUE "POSITIVE"  STYLE HIGHLIGHT.
05  COL 15  PRESENT WHEN W-VAL = 0  VALUE "ZERO"      STYLE ALT-FONT.
05  COL 15  PRESENT WHEN W-VAL < 0  VALUE "NEGATIVE"  STYLE GRAPHIC.
```

7. If STYLE is defined on an elementary field that has **suppressed zeros** or **trailing spaces**, the STYLE will apply only to the characters printed. For example, the coding:

```
05  COL 11   PIC ZZZZZ9   SOURCE W-PAYMENT  STYLE UNDERLINE.
05  COL + 2  VALUE "PAYMENT OVERDUE".
```

might result in:

15 PAYMENT OVERDUE

3156 PAYMENT OVERDUE

152722 PAYMENT OVERDUE

If you do not want this effect, code the STYLE clause at a **group** level, e.g.

```
05   STYLE UNDERLINE.
  07   COL 11   PIC ZZZZZ9     SOURCE W-PAYMENT.
```

### 3.22.4 Compatibility

The STYLE clause is unique to new Report Writer.

# 3.23 SUM clause

This clause automatically forms **totals** from any other numeric field. You may also use it as a term in an *arithmetic-expression* in a SOURCE clause.

### 3.23.1

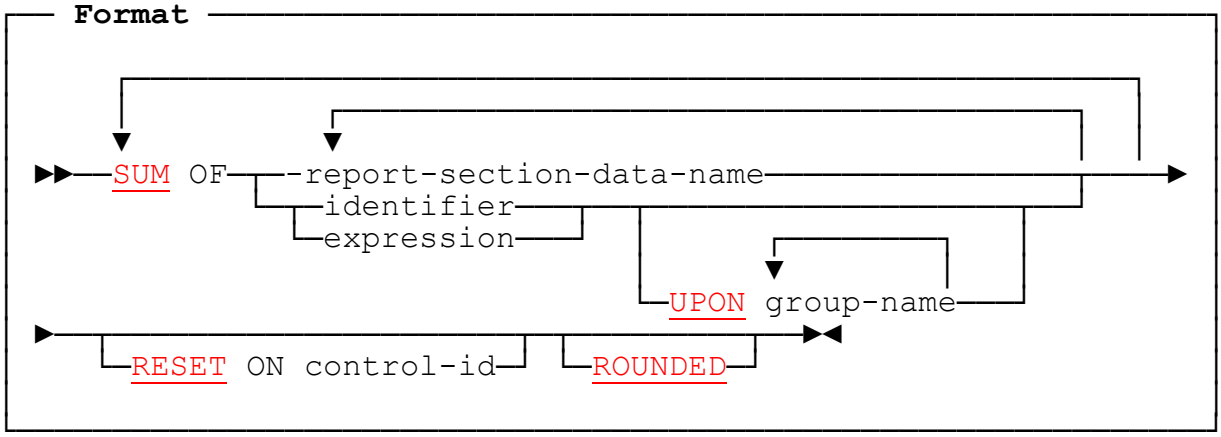


### 3.23.2 SUM Clause: Coding Rules

1. There are two ways to code the **SUM** clause:

   a. **As a clause in its own right**. You write the clause in place of a **SOURCE**, **VALUE**, or **FUNCTION** clause. For example:

```
05  COL 21   PIC ZZZ9   SUM OF SALE.
```

   b. **As a term in an expression**; for example

```
05  COL 21   PIC ZZZ9
    SOURCE IS ((SUM OF REVENUE) + (SUM OF TAX)) / 100.
```

   This type of expression can only be used as a SOURCE operand (although, as usual, the **SOURCE** keyword is optional). You cannot use a SUM term as part of a **condition** or, for instance, as a parameter to a **FUNCTION**.

2. The **item summed** can be either of two things:

   a. **The name of any numeric data item in your REPORT SECTION** (other than a FUNCTION entry). To use this, you must place a *data-name* on the item in the REPORT SECTION you want to total. Suppose you need to form a total from the following report field:

```
05  COL 41     PIC 99999       SOURCE WAGES.
```

   Just place a *data-name* of your own choosing on it, such as:

```
05  R-WAGES    COL 41   PIC 99999     SOURCE WAGES.
```

and you may now write **SUM OF R-WAGES** in another item in your report to form a total. This is called a *REPORT SECTION* **SUM** clause. A REPORT SECTION SUM operand **never** has any subscripts or arithmetic symbols - you can write only: **SUM OF data-name**.

The data item referred to in the SUM clause may be qualified by the report-name, as in **SUM R-PAYMENT IN SUMMARY-REPORT**. By **default**, the qualifier is the same report as the one in which the SUM is defined. So if the same data-name appears in more than one report, it may be referred to by a SUM clause **in its own report** without qualification. (It cannot be referred to by a SUM in a different report without a qualifier.) This means that you can duplicate a complete report description with SUM clauses without changing any of the data-names on SUM entries.

b. **A numeric identifier or expression from outside the REPORT SECTION**. In this form, it is similar in appearance to the operand of a SOURCE clause. This is called a **non-REPORT SECTION** SUM clause.

(Unless a naming convention is observed, there is no way of telling from the data-name whether the SUM clause references a REPORT SECTION SUM or not. In the examples in this volume, we sometimes use a prefix such as "R-" to designate a REPORT SECTION item, so that "SUM OF R-..." will be recognized as a REPORT SECTION SUM. Observing a standard like that will make your REPORT SECTION easier to follow.)

A SUM clause may total **several** items, and you may combine REPORT SECTION and non-REPORT SECTION items; for example:

```
SUM OF W-BASIC, R-BONUS, R-OVERTIME
```

where **W-BASIC** is a non-REPORT SECTION item, **R-BONUS** is a REPORT SECTION item in a different report group and **R-OVERTIME** is a REPORT SECTION item in the same report group. In this case, the total field is always the sum of the individual totals that would be formed from each of its items. You should then interpret the remarks in the remainder of this section for each of the single SUM operands individually. This is **not** similar to the multiple SOURCES clause (despite their syntactic similarity), since only **one** printable item is defined with the SUM clause.

3. Your report may contain as many entries with SUM clauses as you wish, in any *TYPE* of group (even RH). Only **elementary** entries can have a SUM clause.

4. If you code the **UPON** phrase, each group-name must be the name of a DETAIL group and should not be the same as the group you are currently defining. The group-name may be **qualified**. If not, the current report is assumed.

5. If your SUM clause is in a **DETAIL** group and the operand of your SUM clause is **not in the REPORT SECTION** (a rare situation), your report should contain more than one DETAIL group and you should logically code the **UPON** phrase, in order to specify on which GENERATE you want adding to take place.

6. If you code the **RESET** phrase, the *control-id* operand must be one of those defined in the CONTROL clause of your report (including REPORT, whose presence is assumed there). If you are currently defining a **CONTROL FOOTING** group, the level of the control in your RESET ON should be **higher** than the level of this group. (It may also be **equal** to the level of the current group, in which case resetting occurs at the normal time, and the phrase is therefore redundant.)

7. The RESET phrase cannot be defined anywhere in a *multiple* CONTROL FOOTING group.

8. You **may** code the SUM clause **more than once** in an entry. The effect of this is to add together the totals formed from each of the clauses. Hence:

```
SUM A  SUM B    gives the same result as   SUM A B
```

(and, if A and B are non-REPORT SECTION items, SUM (A + B)). This separation is essential only if you need to use a certain UPON phrase with one but not the other, for example:

```
... SUM A UPON DETAIL-1   SUM B UPON DETAIL-2.
```

9. **ANS-85 note**. Since a *reference-modified* identifier is regarded as **non-numeric**, you cannot SUM it, either directly as the operand of your SUM clause, or indirectly by naming a REPORT SECTION item where it is used as a SOURCE.

### 3.23.3 SUM Clause: Operation

Report writer performs the **totalling**, **presenting**, and **resetting** (to zero) of your totals completely automatically. These three stages are covered in the next three numbered paragraphs.

1. **Totalling**

The method used for totalling depends on whether the item referred to by SUM is a data-name on a REPORT SECTION entry (called henceforth a "**REPORT SECTION SUM** "), or not.

a. <u>REPORT SECTION SUM</u>

Whenever the originating data item named in your SUM clause is output in the report, the item it references is also added into the (internal) total field. If the REPORT SECTION data item totalled contains a SOURCE or VALUE clause, the amount added to the total is the **SOURCE or VALUE** operand outside the REPORT SECTION, **not** the intermediate REPORT SECTION field. For example, if you write:

```
05  R-FLD1     COL 1    PIC 999     VALUE 100.
05  R-FLD2     COL 5    PIC 9999   SOURCE W-PAYMENT.
    ...
05  ...            SUM OF R-FLD1, R-FLD2.
```

the fields added into the total will be 100 and W-PAYMENT, **not** the report fields R-FLD1 and R-FLD2. Thus, if **W-PAYMENT** has a PICTURE of **9(5)V99** rather than **9(4)**, the full originating value - not the truncated value that appears in the report line - will be added.

There are two names used to distinguish two cases of REPORT SECTION SUMming:

i. Cross-Footing

In the next illustration, the item to be totalled is in the **same** report group as your SUM clause:

```
     FURNITURE SALES                THIS YEAR BY QUARTER

     SPRING      SUMMER       FALL        WINTER       TOTAL

      $2300       $3400       $1600        $3500       $2000
```

```
01   YEARS-SALES      TYPE DE   LINE + 1.
     05  R-QUARTER  COL 3  STEP 10   OCCURS 4  VARYING SEASON
                    PIC $(6)9   SOURCE QTLY-SALE (SEASON).
     05             COL +10     PIC $(7)9     SUM OF R-QUARTER.
```

The SUM entry may appear *earlier* in the report group than the item it is totalling and this may be carried on to any number of stages. Thus the physical **order** of totals and items being totalled within a single group is **immaterial**. Report writer decides for itself the order in which totalling must be done. Hence the correct result is obtained by coding for example:

```
            05  R-A        ...      SUM OF R-B ...
            05  R-B        ...      SUM OF R-C ...
            05  R-C        ...      SUM OF R-D ...      etc.
```

However, you must avoid *circular* dependencies such as:

```
            05  R-A        ...      SUM OF R-A ...
        or
            05  R-A        ...      SUM OF R-B ...
            05  R-B        ...      SUM OF R-A ...
```

ii. Rolling Forward

In the next illustration, the item to be totalled is in a **different** group from your SUM clause:

```
FURNITURE SALES                          CITY:    DENVER
                                       THIS YEAR  LAST YEAR

ARMCHAIRS                               $3500      $2000
SETTEES                                  $300       $200
WRITING DESKS                           $2200      $1200
DINING TABLES                           $1700      $2300

TOTALS                                  $3500      $2000
                                       -------    -------
```

```
01  SALES-DETAIL-LINE   DETAIL   LINE + 1.
    05    COL 1      PIC X(20)   SOURCE DESCRIPTION.
    05  R-SALES     COLS RIGHT 31 41     PIC $(6)9
                     SOURCES VAL-THIS-YR, VAL-LAST-YEAR.
01  SALES-TOTALS    CF FOR CITY.
  03  LINE + 2.
    05    COL 1      VALUE "TOTALS".
    05    COLS RIGHT 31 41  PIC $(7)9  SUM OF R-SALES.
  03   LINE + 1     COLS RIGHT 31 41   VALUE "-------".
```

In this example, the "boxes" contain instances of the different report groups. The values to be added appear in a DETAIL, and the total is in a CONTROL FOOTING.

You may use also this method of summing between any reasonable combination of groups, namely any of the following:

- **Lower CONTROL FOOTING** to **higher CONTROL FOOTING**,
- **DETAIL** to **DETAIL**,
- **Any group** to a **REPORT FOOTING**,
- **Any body group** to a **PAGE FOOTING**,
- **PAGE FOOTING** to a **CONTROL FOOTING**.

Frequently there are several items that could be rolled forward to produce the same result. For example, your YEAR totals are the total of the twelve MONTH totals; they are also the total of your fifty-two WEEK totals and your 365 DAY totals. Rolling forward the *immediately-lower-level* total (such as MONTH totals into YEAR totals) is the most efficient technique.

b. Non-REPORT SECTION SUM

Here totals are gradually accumulated from values held **outside** the REPORT SECTION. This method was much used in the earlier versions of report writer and you may possess some old programs that use it. This is usually referred to as *subtotalling*. Because the identifier or expression lies **outside** the REPORT SECTION, it is not as clear as it is with a REPORT SECTION SUM clause exactly **when** the values are added into the total, so the following rules are important:

i. If **SOURCE SUM correlation** is in effect (see 3.23.5 *Subtotalling and SOURCE SUM Correlation*), adding takes place when any DETAIL is being GENERATEd that contains the same identifier as a SOURCE item as the identifier appearing in the SUM clause.

ii. If the **UPON** phrase is used, adding takes place when a DETAIL group specified in that phrase is *GENERATE*d.

iii. If **SOURCE SUM correlation** is **not** in effect and there is no UPON phrase, adding takes place on **each GENERATE** that refers to the report.

Almost all totalling can also be accomplished by means of REPORT SECTION SUM clauses.

2. **Presenting the total**

When the entry containing you SUM is output, the (unedited) total to-date is used as an internal "source" for the contents of the field. Thus, if you had coded:

```
05   COL 5    PIC $$,$$$,$$9.99   SUM R-PAYMENT.
```

the internal total field (which is fully described below under *Use of Total Fields*) is *MOVE*d to this report field, and edited according to the given **PICTURE**, according to the same rules as the **SOURCE** clause.

3. **Resetting the total**

The total is reset (cleared to zero) at the end of the processing for the report group in which it is defined, unless you override this using the RESET phrase as described below (see 3.23.7 *The RESET* Phrase). Thus the total field remains available for use anywhere in the same group (within a SOURCE for instance) before its contents are erased.

4. When adding a value into the total, the report writer code obeys the rules of the **ADD** statement. Unless you coded **SUM OVERFLOW PROCEDURE IS OMITTED** in the *RD*, a SIZE ERROR test is always done and if there is size error, a run time error is signalled at once.

5. If the SUM clause appears in a **multiple CONTROL FOOTING** group, the SUM clause has its **usual** effect in the **lowest** level group and in the **higher** levels acts by **rolling forward** each previous level. For example, in the following structure:

```
01  TYPE CF FOR STATE COUNTY CITY.
    ...
    05  COL 1     PIC ZZZ9 SUM OF W-PAY.
```

the SUM clause acts like **three different SUM clauses**. At the **lowest** level (*CITY*), it behaves as defined (by **subtotalling W-PAY**). The CITY total is then **rolled forward** into the *COUNTY* total on change of CITY and the COUNTY total is rolled forward into the *STATE* total on change of COUNTY.

6. Summing a Repeated Item

If you wish to sum a repeating item, you may form totals along any of four different **axes**. These are, from minor to major:

Axis 1: **COLUMN** Axis

Axis 2: **COLUMN-Group** Axis (below LINE and above COLUMN)

Axis 3: **LINE** Axis

Axis 4: **LINE-Group** Axis (above LINE and below report group)

Report writer will automatically total the repetitions of your field along any axes necessary to form the total. The direction of the adding depends not on the **syntax** of the clause you use but on **where you place it**. If your SUM clause has **no** repetitions at all (is **not** subject to an OCCURS clause or a *multiple* LINE or COLUMN clause), report writer will total **all** occurrences of the field. You can thus total a REPORT SECTION table of any number of dimensions. If your SUM clause **is** part of a repeating report field, then the item being summed must repeat the **same** number of times **along the same axes** as the SUM entry. Your field will be **output** along any of the axes **shared** and **totalled** along any of the axes **not shared** by the SUM entry. An example will make this clearer. In the following case, the field **R-QUARTER** has an **OCCURS** clause in **two** axes: the LINE axis and the COLUMN axis.

```
  SALES OF SPORTS GEAR       YEARLY BY QUARTER
       SPRING   SUMMER    FALL    WINTER
1988   $2300    $3400    $1600    $3500
1989   $3200    $3600    $2700    $3000
1990   $3500    $4000    $3400    $4300
1991   $3600    $4300    $3800    $4500
1992   $3800    $4200    $3900    $4750
```

The following code produces this layout:

```
01   SALES-DETAIL     TYPE DE.
 03   LINE + 1        OCCURS 5     VARYING YEAR-NO.
  05  COL 1           PIC 9(4)     SOURCE 1987 + YEAR-NO.
  05 R-QUARTER COL 6 PIC $(6)9  OCCURS 4 STEP 10  VARYING SEASON
                     SOURCE SALE (YEAR-NO SEASON).
```

To obtain **row totals**, code the SUM clause as an entry at a level within the same LINE as the items referred to in SUM. (The entry below is named ROW-TOTAL but you may choose **any** data-name). To obtain **column totals**, place the SUM clause within a **separate LINE** and give it the same number of horizontal repetitions as its operand. (The entry below is arbitrarily named COL-TOTAL.) The final result is as follows:

```
  SALES OF SPORTS GEAR        YEARLY BY QUARTER

        SPRING    SUMMER     FALL     WINTER          TOTAL

 1988   $2300     $3400      $1600     $3500          $10800
 1989   $3200     $3600      $2700     $3000          $12500
 1990   $3500     $4000      $3400     $4300          $15200
 1991   $3600     $4300      $4800     $4500          $17200
 1992   $3800     $4200      $3900     $4750          $16650

TOTALS $16400    $19500    $16400    $20050          $72350
```

```
01   SALES-DETAIL       TYPE DE.
  03   LINE + 1         OCCURS 5     VARYING YEAR-NO.
    05   COL 2          PIC 9(4)     SOURCE 1987 + YEAR-NO.
    05 R-QUARTER   COL 8          PIC $(6)9  OCCURS 4 STEP 10
                   VARYING SEASON   SOURCE SALE (YEAR-NO SEASON).
    05 ROW-TOTAL   COL 48         PIC $(7)9  SUM OF R-QUARTER.
  03   LINE + 3.
    05                           COL 1      VALUE "TOTALS".
    05 COL-TOTAL   COL 7          PIC $(7)9  OCCURS 4 STEP 10
                                 SUM OF R-QUARTER.
    05 ALL-TOTAL   COL 47         PIC $(7)9  SUM OF COL-TOTAL.
```

Notice that the field **ALL-TOTAL** could also have been coded as **SUM OF R-QUARTER** (which is less efficient) or SUM OF ROW-TOTAL. Also notice that the data-names *ROW-TOTAL* and *ALL-TOTAL* are not referenced and could have been omitted.

7. You may require just a single total of all the entries (the "*corner*" total in the above illustration), without any row or column totals. Just write the ALL-TOTAL entry alone:

```
                                                    $72350
```

```
           05 ALL-TOTAL   COL 47     PIC $(7)9  SUM OF R-QUARTER.
```

8. Other Axes

The examples shown earlier cover only two out of the four possible axes. You may also SUM along the other two axes, that is: groups of *COLUMNs* and groups of *LINEs*. As an example of groups of COLUMNs, take this layout, where we total the four weeks in each month horizontally:

```
 SPORTS CLUB          QUARTERLY INCOME        SPRING QUARTER        PAGE  1

 ITEM  TOTAL TOTAL     WEEKS        TOTAL     WEEKS        TOTAL     WEEKS
       QTR   APR  1   2   3   4    MAY  1   2   3   4    JUN  1   2   3   4

GOLF   2580  670 300 200  70 100  1100 450 600  50   0   810 140  90 200 380
SQUASH  980  410 200  40 120  50   340 250  30   0  60   230  60  45  25 100
TENNIS 1810  450 200  70  90  90   590 300 160  40  90   770 200 320 160  90
```

```
01  INCOME-TABLE        TYPE DE.
  03  LINE +1           OCCURS 5      VARYING SPORT.
    05                  PIC X(6)      SOURCE SPORT-NAME (SPORT).
    05 R-QTR   COL 7    PIC Z(4)9      SUM OF R-MONTH.
                                   (or: SUM OF R-WEEK.)
    05  OCCURS 3   STEP 22           VARYING MONTH FROM 4.
      07 R-MONTH        COL 12        SUM OF R-WEEK   PIC Z(4)9.
      07 R-WEEK         COL 17   STEP 4   OCCURS 4 VARYING WEEK
                        PIC ZZZ9      INCOME (SPORT, MONTH, WEEK).
```

This example also illustrates the fact that cross-foot totals need not appear to the right, or below, the figures from which they are formed.

9. If your program contains **more than one report**, you are **not** restricted only to rolling forward within one report. A SUM clause in one report may refer to a named numeric data item in a **different** report. As with totalling in a single report, the value of the referenced field is added whenever the field is output. (This does not apply to non-REPORT SECTION summing, however, when SOURCE SUM correlation is in effect: see 2.4 *ALLOW clause*.) Note that all total fields in a Report are **cleared** by the **INITIATE** statement for the report. Therefore, if you need to SUM from one report to another, be sure that both are INITIATEd at the start of the processing.

10. A **PRESENT WHEN** clause may test the value of any total fields referenced in its condition-operand. However, it should then not contain within its scope either an entry with a SUM clause or an entry that is summed by a SUM clause. See 3.18.4 *Effect of PRESENT WHEN on SUM*.

11. Totalling Unprintable Items

You may total **unprintable** items in your REPORT SECTION. This is useful when you want to print the totals only, not the unprinted individual values. In the next example, the report computes a **yearly** total from 12 unprinted **monthly** values:

```
YEARLY EXPENDITURE

 1991      $2300.00  <--  - -  jan + feb + ... + dec
 1992      $3766.50
```

```
03  LINE.
  05  COL 2          PIC 9(4)    SOURCE YEAR.
  05  R-EXPENSE      PIC 9(6)V99     OCCURS 12
      VARYING MONTH      SOURCE F-EXPENSE (MONTH).
  05  COL 7          PIC $(6)9.99    SUM OF R-EXPENSE.
```

12. It is not possible to accumulate in an instant a single total all the entries in a table **outside** your REPORT SECTION without using an intermediate unprintable table as in the example above. However, you may use a **non-REPORT SECTION** SUM clause to accumulate - over time - single entries in a table into a corresponding matching number of totals, typically in a CONTROL FOOTING. Since your SUM operand is not in the REPORT SECTION, you may use **subscripts** with it, just as you would in the SOURCE clause:

```
                SPORTS CLUB REVENUE REPORT
  ..... ..... ..... ..... ..... ..... ..... ..... .....

 END-OF-REPORT SUMMARY:
TOTALS:  GOLF       TENNIS    SWIMMING      SQUASH   RESTAURANT
       $32400       $19500      $16400      $20050      $72350
```

```
01   CF FOR REPORT.
  03   LINE   ...
    05   COL 7 STEP 11   OCCURS 5     VARYING SPORT
                PIC $(6)9   SUM OF W-SPORT-REVENUE (SPORT).
```

13. If the SUM operand is not in the REPORT SECTION, you may also total **arithmetic expressions**, such as:

```
05  COL 54  PIC ZZZZ9  SUM OF (W-INCOME - W-TAX) * 100.
```

An evaluation is performed for the expression on every **GENERATE**, before the result is added into the total field, so the use of this technique is less efficient - and more susceptible to rounding errors - than a method using unprintable intermediate totals. (The accumulation is not affected by the status of SOURCE SUM correlation.)

### 3.23.4 Use of Total Fields

1. If you give a *data-name* to an entry that contains a SUM clause (not a SUM term that is part of an expression), report writer will relate the data-name to its own (internal) *total field*, **not** to the (edited) external field in the report line, as would be the case with a **SOURCE**, **VALUE**, or **FUNCTION** clause. (The total field is called a *sum-counter* in older texts, but *total field* is clearer as it does not conflict with the COUNT clause.) Compare these two cases:

   a. **With SOURCE etc.:**

```
05  R-PAYMENT   COL 21   PIC $(7)9.99   SOURCE IS WS-PAYMENT.
```

```
$$$$$$$9.99   ◀◀◀ report line
```

└ Field **R-PAYMENT** is actual report-line field, except when referenced in a SUM clause, in which case **WS-PAYMENT** is what is added.

b. **With SUM:**

```
05    TOT-PAYMENT COL 21      PIC $(7)9.99    SUM OF WS-PAYMENT.
```

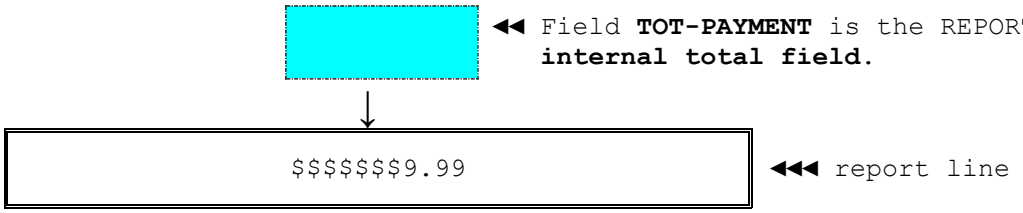


2. The **internal** total field is a **pure numeric**, **signed COMPUTATIONAL** field with as many integral and fractional digits as the SUM entry. Hence, no precision will be lost when the total field is stored in the report field. If the SUM clause refers to a REPORT SECTION item, the precision of the total field is increased if necessary so that it has at least as many integral and fractional digits as the entry being totalled. Hence the total will have **at least** the precision of the field being totalled, rounding or truncation taking place, if indicated, when the field is **output**, not while it is being **accumulated**. Here are some examples:

| PICTURE in SUM Entry | PICTURE of SUM Operand if in REPORT SECTION | PICTURE of Internal Total |
|---|---|---|
| **99999** | (not in REPORT SECTION) | **S9(5) COMP** |
| **ZZZ9.99** | ZZ9.99 | **S9(4)V99 COMP** |
| **$(6)9-** | $(5)9.99- | **S9(6)V99 COMP** |

Note that the total field is always signed, even if the report line field is not signed, so the adding into the total field is always algebraic.

3. Accessing the Total Fields

You may access the internal total field directly in the following four ways.

a. In a SOURCE Clause

You may **capture an internal total field** with a **SOURCE** clause, either as its single operand or as a term in an operand that is an expression. The value you obtain depends on the category of the total field you access, as follows:

i. SOURCE Refers to Total Field Defined in the Same Report Group

You will always obtain a true value of the total as specified. The position of the SOURCE clause within the group is immaterial, as report writer always computes the totals before producing any of the group's report lines (which is when SOURCE operands are filled in).

This feature is useful when you wish to form an unprintable total from a **non-REPORT SECTION** field without loss of precision and then output it **ROUNDED** . You might wish to form totals to **cents** precision and output them to the nearest **dollar**. You should then write **two** entries in the same report group, one of which has no COLUMN clause and is therefore unprintable, as in this example:

```
      *the first item is unprintable:
           05 TOTAL-FIELD     PIC S9(6).99    SUM OF WS-FIELD.
      *the second item prints its contents:
           05  COL 21  PIC -(6)9  SOURCE TOTAL-FIELD  ROUNDED.
```

If you had written instead:

```
           05  COL 21  PIC -(6)9  SUM OF WS-FIELD.
```

the internal total field would have the implied PICTURE S9(6) COMP, so you would lose precision each time the (truncated) value of WS-FIELD is added in. Truncation would not arise if the SUM operand were a **REPORT SECTION** data-name, since the precision of the **summed** field is then also taken into account in establishing the required precision of the **sum field**.

Alternatively, you may make use of report writer's less efficient but highly accurate default **PICTURE S9(12)V9(6)** for SUM **terms** in SOURCE clauses, by coding:

```
           05  COL 21    PIC -(6)9    SOURCE (SUM OF WS-FIELD).
```

The next example uses an arithmetic expression involving total fields:

```
05  COL 10                VALUE "TOTAL INCOME:".
05 R-TOT-INCOME  COL + 2     PIC Z(6)9          SUM OF INCOME.
05  COL 35                VALUE "TOTAL TAX:".
05 R-TOT-TAX     COL + 2     PIC Z(6)9          SUM OF TAX.
05  COL 55                VALUE "NET PAY:".
05  COL + 2      PIC Z(6)9   SOURCE (R-TOT-INCOME - R-TOT-TAX).
```

It would also have been correct to code the last entry as:

```
05  COL + 2      PIC Z(6)9   (SUM OF INCOME) - (SUM OF TAX).
```

However, the first code shown is more economical since we are printing the individual totals R-TOT-INCOME and R-TOT-TAX already elsewhere and can therefore re-use them in the expression instead of summing them again.

ii. SOURCE Refers to Total Field **Not** Defined in Same Group *(Snapshots)*

If the SUM total field referred to in turn refers to a **non**-REPORT SECTION item (subtotalling) or to an entry in a **different** report group (rolling forward), you will obtain at that instant the up-to-date accumulated value, a technique which is useful for obtaining *brought forward* and *carried forward* totals, as in the layout on the following page:

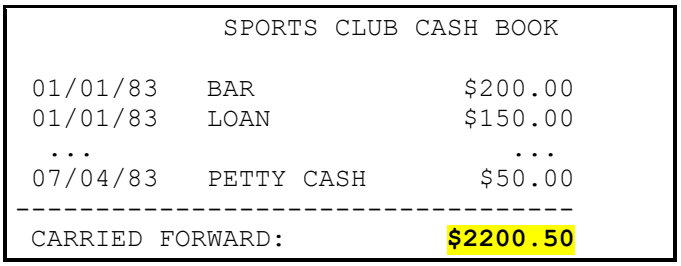

```
             SPORTS CLUB CASH BOOK

 01/01/83    BAR                $200.00
 01/01/83    LOAN               $150.00
  ...                             ...
 07/04/83    PETTY CASH          $50.00
---------------------------------------
 CARRIED FORWARD:              $2200.50
```

<< **First Page**

*Grand total field TOT-CASH is being accumulated while these fields are output.*

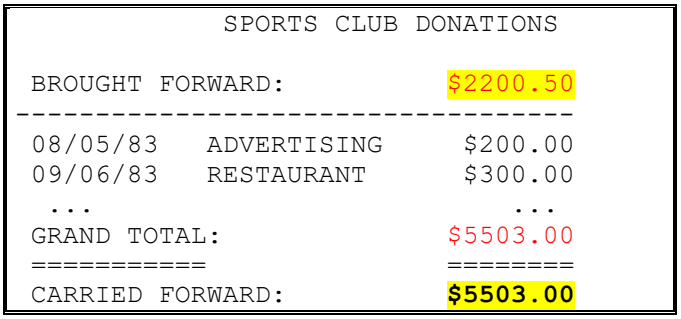

```
             SPORTS CLUB DONATIONS

 BROUGHT FORWARD:              $2200.50
---------------------------------------
 08/05/83    ADVERTISING        $200.00
 09/06/83    RESTAURANT         $300.00
  ...                             ...
 GRAND TOTAL:                  $5503.00
 ===========                   ========
 CARRIED FORWARD:              $5503.00
```

<< **Last Page**

```
WORKING-STORAGE SECTION.
01   WS-TOT-CASH          PIC S9(4)V99 COMP.
REPORT SECTION.
...
01  TYPE PH.
  03  LINE 1        COL 1 VALUE "          SPORTS CLUB DONATIONS".
  03  LINE + 2      ABSENT AFTER NEW REPORT.
    05  COL 1       VALUE "BROUGHT FORWARD:".
    05  COL 25      PIC $(5)9.99             SOURCE WS-TOT-CASH.
01  CASH-ENTRY      TYPE DE           LINE.
    05 ...
    05   P-CASH     COL 26   PIC $(4)9.99   SOURCE CASH.
01  TYPE CF FINAL.
  03   LINE.
    05   COL 1      VALUE "GRAND TOTAL:".
    05 TOT-CASH     COL 26   PIC $(4)9.99   SUM OF P-CASH.
01  TYPE PF         LINE 60.
    05   COL 1      VALUE "CARRIED FORWARD".
    05   COL 25     PIC $(5)9.99             SOURCE WS-TOT-CASH.
...
PROCEDURE DIVISION.
...
    GENERATE CASH-ENTRY
    MOVE TOT-CASH TO WS-TOT-CASH
```

We reference a SUM total field in a SOURCE to capture a *snapshot* of the *running total*. The SUM entry is gradually accumulated over a certain part of the report, so we obtain any number of versions of it at any state up to the eventual total. This, incidentally, gives us an alternative to the RESET phrase for forming *cumulative* (running) totals.

In the sample code we save the SUM total field procedurally in a working location (WS-TOT-CASH) after each GENERATE and use that in the SOURCE for the next cycle. This is done for two reasons:

It is independent of whether or not the option is in effect. The (standard but "less logical") option does rolling forward and subtotalling **before** the page-fit test (see *GENERATE Processing Cycle*), so our total fields will already have been updated by the new value of CASH and we would otherwise have to subtract it again in the SOURCE to get the true total. The option corrects this anomaly, but there is a second problem:

Whichever option is in effect, the total field is reset to zero immediately after its CONTROL FOOTING group has been output, so it cannot appear in the PAGE FOOTING beneath it (the last page in our example, since the group is a CF FINAL). Hence the use of WS-TOT-CASH which is the current total "suspended from the last GENERATE".

If we did not wish to print a grand total field from which to "*snapshot*" the values, we could define the total as an unprintable item (with no COLUMN clause).

b. In a PRESENT WHEN clause

You may test the value of a total field in a PRESENT WHEN's *condition* to control what is produced in the report group. The effective value will be the same as for the case with **SOURCE** above. However, if you do this, do **not** code any SUM clauses or any summed entries within the scope of your PRESENT WHEN clause. This avoids a *deadlock* situation where summing depends on conditions and conditions depend on summing. A useful example is the common requirement to suppress zero totals. The code should be as follows:

```
04 TOTAL-CASH       PIC 9(4)     SUM OF CASH.
04   LINE + 2       PRESENT WHEN TOTAL-CASH NOT = ZERO.
 05   COL 1         "TOTAL = ".
 05   COL 11        PIC ZZZ9     SOURCE TOTAL-CASH.
```

TOTAL-CASH is an unprintable SUM entry that is - as necessary - **outside** the scope of the PRESENT WHEN. (If your entire LINE is subject to the PRESENT WHEN, place your unprintable field in another LINE of the same group. Since it is unprintable, its placement is immaterial.)

You may use the total field even if it is defined **later** in the same group because totalling is completed for each group before production of **any** of the report lines begins.

c. In the Main-Line PROCEDURE DIVISION

You may **capture** the contents of a subtotalled or rolled forward total field in a main-line **COBOL procedural statement**. As an example of the use of this property, you may move a total field into a record in a different output file. This will save you the effort and inefficiency of totalling the same field independently. However, the contents of an unconditional cross-foot total will always be zero, because it will always have been output as soon as it was totalled. (A total field is reset to zero at the end of the report group in which it is defined, unless the **RESET** phrase *defers* this action – see 3.23.7 *The RESET* Phrase.)

You may also **procedurally alter** (that is, ADD TO, SUBTRACT FROM etc.) the value of any named total field at any time. Of course, if you do so the results that appear in the total fields will be different from those you would expect if report writer alone were accumulating the totals. You may also need to handle any possible size errors in the total field. The values you added or subtracted will be reset with the rest of the value at the usual time.

Total fields are **cleared to zero** by the **INITIATE** statement. They will also normally be zero after execution of the **TERMINATE** statement. This is because they are always cleared after being output, and the TERMINATE statement outputs all CONTROL FOOTING groups and any PAGE FOOTING and REPORT FOOTING. However, if a SUM clause was coded in another type of group, such as a DETAIL, that is **not** automatically output when your program issues the TERMINATE, there could be a non-zero total waiting in vain to be output. Also, if the SUM clause was **conditional**, the field with the SUM might have been **absent** on the last occasion, in which case a non-zero total might still be waiting to be output. In all these cases, report writer will issue a run time error and the total will be cleared if and when your program issues another **INITIATE** for the corresponding report.

d. In a Declarative SECTION

You may also access total fields in a **USE BEFORE REPORTING** Declarative SECTION for any report group. As is the case with reference to sum totals in a SOURCE, described above (see a(ii)), the state of any total fields you may access depends on whether the *OSVS* option is in effect or not.

Any **cross-foot** totals for the group will already have been calculated in all cases.

If *OSVS* is in effect, any rolling forward (from this group into a different group) and subtotalling (if this is a DETAIL group, or a PH or PF triggered by a DETAIL group) are done **before** entry to the Declarative SECTION. Hence you will obtain **all totals** fully updated. (See 4.2.4 *GENERATE Processing Cycle*.)

If *OSVS* is not in effect, by contrast, any rolling forward and subtotalling are done **after** entry to the Declarative SECTION. So, especially if your group is a PAGE FOOTING (or HEADING), you will obtain an accurate value of the total at that "physical point" in the report.

4. Precision of SUM terms

   If you use SUM or COUNT as a **term** in a SOURCE's expression, report writer will assign the internal total field with **PICTURE S9(12)V9(6) COMP** , irrespective of the PICTURE of the report field.

### 3.23.5 Subtotalling and SOURCE SUM Correlation

*Subtotalling* is the term used when your SUM clause or SOURCE clause SUM term specifies a **non-REPORT SECTION** operand, that is, an item in your FILE, WORKING-STORAGE, or LINKAGE SECTION. *OS/VS* and *DOS/VS* COBOL report writer, which is based on **ANS-68**, depends on subtotalling for forming most totals. With *report writer*, you should rely instead on **rolling forward**, by giving a data-name to a DETAIL group's SOURCE entry, so that there is no need to worry about when the items are added into the total fields. However, there are still times when subtotalling might be preferred, such as when you are creating total lines in a *summary report* and have not coded SOURCE items in a DETAIL group to refer to. The rules of operation are as follows:

1. Report writer adds the SUM operands ("*addends*") directly into the total field, following the normal rules of the **ADD** statement. If there is a **size error**, the same action takes place as for REPORT SECTION SUM totals, as described above.

2. SOURCE SUM Correlation.

   The decision as to **when** to add the items depends on whether **SOURCE SUM correlation** is in effect. This is the chief difference between the *ANS-68* standard used in OS/VS and DOS/VS COBOL, which automatically applies SOURCE SUM correlation, and the *ANS-74* and *ANS-85* standards, which do not. You will observe a difference only when the following circumstances occur **simulataneously**:

   a. When your report has **more than one DETAIL** group; **and**

   b. When your program *SUM*s an operand that is also a non-REPORT SECTION SOURCE operand in one or more of the DETAIL groups.

   Otherwise, report writer will not apply SOURCE SUM correlation. SOURCE SUM correlation is **in effect** if:

   c. The precompiler was installed with the *OSVS* option set *on*, or

   d. You code an **ALLOW SOURCE SUM CORR** clause in your RD.

   SOURCE SUM correlation is **not** in effect if:

   e. Your system was installed with the *OSVS* option set *off* (*ANS74* or *ANS85*), or,

   f. You code an **ALLOW NO SOURCE SUM CORR** clause in your RD.

3. If SOURCE SUM correlation is in effect, report writer takes each non-REPORT SECTION operand specified in your SUM clause and **scans the DETAIL groups** of your report to establish whether the **same item** is coded in **more than one of them** as a SOURCE operand. (The **SOURCE** keyword may, as usual, have been omitted.) Arithmetic expressions are **not** examined. Redefinitions of the same item and differences in subscripts or qualifiers (apart from interchanging the words *IN* and *OF*) mean that there is no match. All your **DETAIL** groups are scanned in this way. The appearance of the same operand more than once as a **SOURCE** in the same DETAIL counts as only a **single** match. If a match is found, report writer will add the item into the total field only when the DETAIL or DETAILs that contain your item are *GENERATEd*. If **no** match is found, report writer will add the item into the total field on **every** GENERATE for that report.

4. Using a dummy DETAIL group for Summary Reporting.

   With the *ANS-68* standard of *OS/VS and DOS/VS COBOL*, a corresponding SOURCE was required for every SUM. This meant that in a *totals only* report, a dummy DETAIL group needed to be defined, as in the following sample:

```
RD  SUMMARY-REPORT
    CONTROL IS STATE.
01  DUMMY-GROUP TYPE DETAIL.
    05                        SOURCE IS WS-PAY-THIS-YEAR.
    05                        SOURCE IS WS-PAY-LAST-YEAR.
01  TYPE CF FOR STATE.
  03  LINE PLUS 2.
    05  COLUMN 1   PIC ZZZ9  SUM WS-PAY-THIS-YEAR.
    05  COLUMN 11  PIC ZZZ9  SUM WS-PAY-LAST-YEAR.
    ...
    GENERATE DUMMY-GROUP
```

   Although *report writer* accepts this code unaltered, the dummy group is now unnecessary - even if SOURCE SUM correlation is in effect. The dummy group in the example above may be deleted and the GENERATE replaced by **GENERATE report-name**:

```
RD  SUMMARY-REPORT
    CONTROL IS STATE.
01   TYPE CF FOR STATE.
  03   LINE PLUS 2.
    05  COLUMN 1    PIC ZZZ9      SUM WS-PAY-THIS-YEAR.
    05  COLUMN 11   PIC ZZZ9      SUM WS-PAY-LAST-YEAR.
    ...
    GENERATE SUMMARY-REPORT
```

   More details will be found under *Summary Reporting* (see *GENERATE statement*).

5. If SOURCE SUM correlation is **not** in effect, report writer will add every operand of the SUM clause into the total field on **every GENERATE** for the report.

### 3.23.6 Three Methods of Subtotalling

In the items just preceding, you observe that, if SOURCE SUM correlation is **not** in effect, adding into your total field will take place on **each GENERATE** for the report. This may not be suitable, especially when you have **several DETAIL** groups. If you have two record types, say SALARY and NAME-ADDRESS, with DETAIL groups that correspond to these, and you want the total of SALARY, you will clearly want the field SALARY to be added only when your program generates the SALARY DETAIL group. There are three ways of avoiding this problem, which are illustrated below.

1. The recommended method of *report writer* is to place a *data-name* on the entry to be totalled (omitting the COLUMN clause if it is not be printed), and **SUM** the item using that *data-name*.

2. If SOURCE SUM correlation **is** in effect and both the SOURCE operand and the SUM operand names are identical, the item will be added, as expected, only when the SALARY group is GENERATEd.

3. **Using the UPON phrase**. You may use this whether or not SOURCE SUM correlation is in effect, because **UPON overrides its effect**. By writing **UPON SALARY-GRP** (where SALARY-GRP is the *01*-level name of your DETAIL group), you ensure that the item will be added into the total only when the **SALARY-GRP** DETAIL group is GENERATEd.

   The next example compares these methods:

```
     SPORTS CLUB OFFICERS: SALARIES

NAME: J.C. CODER          SALARY:  $10000

BANK: BARCLAYS
      1 FARNHAM ROAD, TENTERDEN

NAME: T.A. ANALYST        SALARY:  $12000

BANK: ...

                TOTAL SALARIES:   $89000
                ------------------------
```

<- **SALARY** group

<- **NAME-ADDRESS** group

a. **Method Using REPORT SECTION SUM** (recommended)

```
 01  SALARY-GRP     TYPE DE   LINE + 1.
     ...
     05 R-SALARY    COL 50   PIC $(6)9   SOURCE SALARY.
 01  NAME-ADDRESS   DE ...
 01  CF   ...
     ...
     05  COL 49     PIC $(7)9    SUM OF R-SALARY.
```

b. **Using SOURCE SUM Correlation**:

```
 RD   ...
*Following may be omitted if set on customization.
     ALLOW SOURCE SUM CORR.
 01  SALARY-GRP   DE   LINE + 1.
     ...
     05  COL 50        PIC $(6)9     SOURCE SALARY.
 01  NAME-ADDRESS   DE   ...
 01  CF   ...
     ...
*Correlation between SOURCE and SUM.
     05  COL 49        PIC $(6)9     SUM OF SALARY.
```

c. **Using the UPON Phrase**:

```
 01  SALARY-GRP    TYPE DE     LINE + 1.
     ...
     05  COL 50    PIC $(6)9   SOURCE SALARY.
 01  NAME-ADDRESS  TYPE DE   ...
 01  TYPE CF   ...
     ...
*UPON phrase indicates "ADD only when SALARY-GRP generated".
     05  COL 49    PIC $(6)9  SUM OF SALARY UPON SALARY-GRP.
```

### 3.23.7 The RESET Phrase

In all our examples presented earlier in this section, the total field is **reset to zero** at the **end of the processing** for the group in which it has appeared. Sometimes you will not want this to happen. Such a case is called a *cumulative* (or *running)* total. Here the total is not necessarily cleared or *reset* after it has been output. Values then continue to be added into the total. You will have seen above that you can capture cumulative totals by "taking a *snapshot*" of a higher-level total field. Another method is to use the **RESET** phrase. Its operand states at which (normally higher) level of control break, if any, the total field is to be cleared. If you specify **RESET ON REPORT** (or **RESET ON FINAL**), the total field will not be reset after the final control footing has been presented, during the execution of the **TERMINATE**.

For example, by writing:

```
03  COL 20 PIC ZZZ9.99   SUM OF ACC-BAL  RESET ON BRANCH-CODE.
```

you ensure that the total field is not cleared until a new BRANCH-CODE is reached.

Here is an example of a cumulative total:

```
SPORTS CLUB.  SALES OF TENNIS SHOES

    DATE              AMOUNT   CUMULATIVE

   010270             100.00
   010370             150.00

TOTALS JAN            350.00       350.00

   020770              50.00

TOTALS FEB             50.00       400.00

   030370             100.00
   160370              40.00
   270370              60.00

TOTALS MAR            200.00       600.00

...etc...             ......       ......

   050171             100.00
   270171             200.00

TOTALS JAN            300.00       300.00
```

*< cumulative and*
*< normal totals same*
*< first time*

*< cumulative total*
*< is not cleared*
*< before adding 50.00*

*< total reset after*
*< change of YEAR.*

```
RD  ...
    CONTROLS YEAR MONTH.
01  CF FOR MONTH.
    ...
    05  COL 21 PIC ZZZ9.99   SUM OF AMOUNT.
    05  COL 33 PIC ZZZ9.99   SUM OF AMOUNT  RESET ON YEAR.
```

### 3.23.8 Compatibility

1. The following features are unique to new Report Writer:

   - Optional word *OF* after keyword,
   - SUM operand can be an expression formed from non-REPORT SECTION items,
   - SUM as a term in an *expression* in a SOURCE clause,
   - SUM clause in report groups other than of **TYPE CONTROL FOOTING**,
   - The **ROUNDED** phrase.

2. *OS/VS and DOS/VS COBOL* Report Writer, in common with *ANS-68* and *ANS-74* requires that any REPORT SECTION item whose *data-name* is the operand of a SUM must itself be a SUM entry, that is, only SUM entries may be rolled forward or used for cross footing. *OS/VS and DOS/VS COBOL* Report Writer **always** assumes SOURCE SUM correlation. It uses the **ANS-68**, not the *ANS-74*, rules.

3. The automatic check for overflow is unique to new Report Writer. A migrated program which produced truncated totals will now produce blank fields instead, plus run time error message 11. In the unlikely event that this truncation is intentional, the clause **SUM OVERFLOW PROCEDURE IS OMITTED** should be placed in the RD.

## 3.24 TYPE clause

This clause is used at the *01*-level to indicate which of the **seven** possible types of report group is being defined.

### 3.24.1

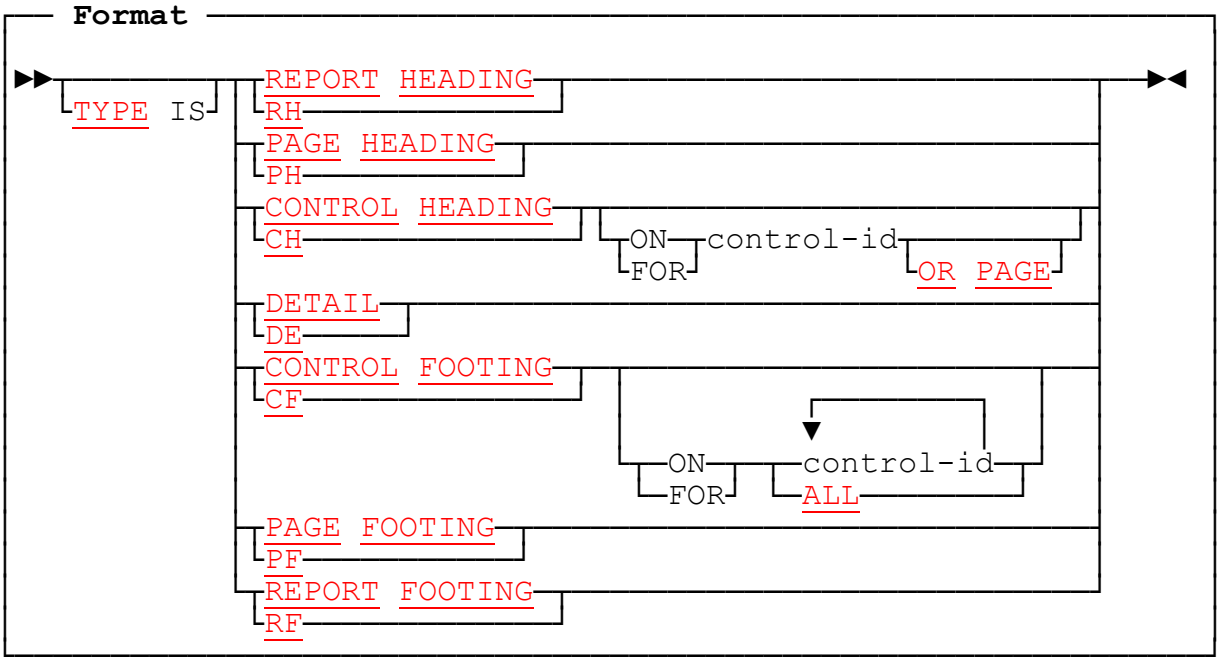


where *control-id* is an identifier in the CONTROL(S) clause, or the word **REPORT** or **FINAL**.

### 3.24.2 TYPE Clause: Coding Rules

1. Write the TYPE clause at the *01*-level entry only. You may omit the keywords **TYPE IS**. If you do **not** code a TYPE clause for a group, it will be assumed to be **TYPE DETAIL**.
2. All TYPEs of report group are **optional**, whatever the circumstances, but every report must have at least one **body group** (CONTROL HEADING, DETAIL, or CONTROL FOOTING).
3. **PAGE HEADING**, **PAGE FOOTING** and the **OR PAGE** phrase of **CONTROL HEADING** groups are allowed only if you have a PAGE LIMIT clause in the *RD*.
4. In the **CONTROL HEADING** and **CONTROL FOOTING** forms each *control-id* operand must be chosen from the list of controls in your **CONTROL** clause, including **REPORT** (or **FINAL**) which is always assumed present.
5. If **CONTROL HEADING** is coded with no *control-id* operand, there must not be more than one *control-id* in the CONTROL(S) clause. The clause is then taken to mean **CONTROL HEADING FOR control-id**, if there is just one *control-id* in the CONTROL(S) clause, or **CONTROL HEADING FOR REPORT** if there is no CONTROL(S) clause at all.

6. If **more than one** (different) *control-id* is coded in the **CONTROL FOOTING** form, the result is a set of *multiple CONTROL FOOTING* report groups. The *control-ids* need not be coded in any particular order and need not form a consecutive hierarchic sequence. For example, if the CONTROLS clause is:

```
CONTROLS ARE STATE CITY STREET
```

it is permissible to code:

```
01  TYPE CF FOR STATE, STREET.
```

which means the same as

```
01  TYPE CF FOR STREET, STATE.
```

If a CONTROL FOOTING is required for all levels of control, **ALL** may be coded instead of the exhaustive list of control-ids.

If a DETAIL group also has the same format as some **CONTROL FOOTINGs**, it is usually worth the effort to define it as the lowest-level CONTROL FOOTING group, and force a lowest-level control break on each GENERATE, in order to make full use of this feature. In this case *summary reporting* is used (see 4.2 *GENERATE statement*) and each totalled value, generated by a **SUM** clause, will be the "*total*" of just a **single value** in the case of the lowest CONTROL FOOTING.

7. If **CONTROL FOOTING** is coded with no *control-id* operand, it is taken to mean **CONTROL FOOTING FOR ALL** or, **CONTROL FOOTING FOR control-id** , if there is just one *control-id* in the CONTROL(S) clause, or **CONTROL FOOTING FOR REPORT** if there is **no** CONTROL(S) clause at all.

8. In any report you may have **any number** of DETAIL report groups, but only **one PAGE HEADING**, **PAGE FOOTING**, **REPORT HEADING**, **REPORT FOOTING**, and each *control-id* may appear in only **one CONTROL HEADING** and only **one CONTROL FOOTING** group. If **CONTROL FOOTING FOR ALL** is coded, it must be the **only** CONTROL FOOTING in the report.

9. The **physical order** of report group descriptions is **irrelevant**. For example, the PAGE HEADING group need not necessarily appear before the DETAIL and PAGE FOOTING. Report writer produces them in the correct sequence according to the rules for *page-fit* and control break testing. However, for ease of maintenance, the order implied in the format above is recommended. Also, it is helpful if CONTROL HEADING groups are coded in *major-to-minor* order and CONTROL FOOTING groups in *minor-to-major* order, paralleling the sequence in which these groups will be presented in the report.

10. In a report with a **PAGE LIMIT** clause, if your group contains any **absolute** LINE clauses, report writer will check that each line of the group will lie within the region of the page appropriate to the *TYPE* of the group. Refer to the diagram of the regions of the page (see 2.9.3 *PAGE LIMIT Clause: Operation*). **REPORT HEADING** and **REPORT FOOTING** groups may appear anywhere on the page from the HEADING position onwards. If your group contains only **relative** LINE clauses, and the report has a PAGE LIMIT clause, report writer will check at compilation time that your group is **not larger** than the appropriate region of the

page, allowing for any other groups that may share that region (that is, a REPORT HEADING appearing above the first PAGE HEADING, or a REPORT FOOTING appearing below the last PAGE FOOTING).

11. All the CONTROL HEADING groups with an **OR PAGE** phrase must be able to fit on the page above any other DETAIL or CONTROL HEADING group. Stated precisely: (a) each DETAIL or other CONTROL HEADING must **either** have **only relative LINE clauses** or must **begin with an absolute LINE** which is higher than the highest possible line number produced by the CONTROL HEADING groups with an OR PAGE phrase, and (b) the **LAST DETAIL** value must be sufficient to accommodate the largest such combination.

### 3.24.3 TYPE Clause: Operation

1. You use the TYPE clause to indicate, implicitly, *where and how* your group is to be produced in the report. Here is a summary of how each TYPE is handled:

**REPORT HEADING**

This group will appear **once**, at the very **start** of the report. (See 4.2.3 *GENERATE Statement: Operation*.)

**PAGE HEADING**

This group will be produced as the **first group in each page**. (See 3.10.3 *LINE Clause: Operation*.)

**CONTROL HEADING**

This group will appear automatically at the **start** of each different actual value of the corresponding *control*. (See 2.6 *CONTROL clause*.) If you code the **OR PAGE** phrase, the report group will also be triggered by a page advance. See 3.24.4 below for full details.

**DETAIL**

All the remaining report groups that are not of one of the other six types are of TYPE DETAIL. DETAIL groups are the only report groups that can be **GENERATEd explicitly** by the program. The remaining six TYPEs of report group are produced automatically whenever necessary before the DETAIL group is processed. (Note that with *summary reporting* , the other six TYPES are the **only** ones that can be produced. See 4.2.2 *GENERATE Statement: Coding Rules*.)

**CONTROL FOOTING**

This group will appear automatically at the **end** of each different actual value of the corresponding *control* or *controls*. (See 2.6 *CONTROL clause*.)

**PAGE FOOTING**

This group will be produced as the **last group in each page** (except on a page occupied only by a **REPORT HEADING** and immediately after a **REPORT FOOTING**). (See 3.10.3 *LINE Clause: Operation*.)

**REPORT FOOTING**

This group will appear **once**, at the very **end** of the report. (See 4.6 *TERMINATE statement*.)

2. RH and PH together

If your report contains **both** a **REPORT HEADING** and a **PAGE HEADING** group, report writer will attempt to place them **both** in the Page Heading region of the page. If it can do this without overlap, without overflowing the region, and without violating any of the above rules, then your REPORT HEADING group will be produced on the **first page** of the report, **above the PAGE HEADING**. If the PAGE HEADING has **relative LINE** clauses, it begins relative to the last line of the REPORT HEADING. If, despite this, you require the REPORT HEADING to appear on a page by itself, you should code **NEXT GROUP NEXT PAGE** in the *01*-level entry of the REPORT HEADING, to suppress this check.

If you want the REPORT HEADING to appear on the first page above the PAGE HEADING and "*push it down*" so that your DETAIL groups start **lower** on the first page than they do on the remaining pages, you should **omit the FIRST DETAIL** sub-clause. Your DETAIL groups will then begin on the **line following the PAGE HEADING** . To get extra space before your first DETAIL group, you may define a blank LINE entry at the end of your PAGE HEADING:

```
RD  ...
    PAGE LIMIT 60.          *> no FIRST DETAIL clause
01  TYPE RH.
  03  LINE 1.
    05  COL 1                 VALUE "END OF YEAR REPORT".
  03  LINE + 1.
    05  COL 1                 VALUE "******************".
  03  LINE + 2.              *> blank lines for first sheet layout
01   TYPE PH.
  03  LINE + 1.
     05  COL 1                VALUE "WOLFITDOWN PETFOODS".
  03   LINE + 2.             *> blank lines before DETAILs begin
```

You may also achieve the same result **without using a REPORT HEADING**, by including **all** the lines in a **single PAGE HEADING** and using a **PRESENT AFTER REPORT** clause (see 3.17 *PRESENT AFTER clause*).

3. PF and RF together

If your report contains **both** a **PAGE FOOTING and** a **REPORT FOOTING** group, report writer will attempt to place them **both** in the Page Footing region of the page. If it can do this without overlap, without overflowing the region, and without violating any of the above rules, then your REPORT FOOTING group will be produced on the last page of the report, **below the PAGE FOOTING**. If the REPORT FOOTING has **relative LINE** clauses, it begins **relative to the last line of the PAGE FOOTING**. If, despite this, you require the REPORT FOOTING to appear on a page by itself, you should code an **ON NEXT PAGE** phrase in the first LINE clause of the REPORT FOOTING, to suppress this check.

### 3.24.4 The OR PAGE Phrase of the CONTROL HEADING

You may add the **OR PAGE** phrase after the *control-id* operand for **TYPE CONTROL HEADING**. This causes your CONTROL HEADING to be produced at the **top of each page**. This enables you to repeat essential "key" information after your regular PAGE HEADINGs. The precise rules of operation are as follows:

1. If your report contains any such **TYPE CH** groups with the **OR PAGE** phrase, the **CONTROL HEADING** group will be presented after a control break at the relevant level, exactly as when the **PAGE** option is not present, but in addition, the actions on page advance processing are modified as follows:

   a. If a DETAIL group causes a page advance then, after the usual page advance has taken place, the CONTROL HEADING group is printed. If more than one TYPE CH group has the OR PAGE option, these CONTROL HEADING groups are printed in hierarchic order, from highest to lowest. Each CONTROL HEADING is, of course, printed on the new page, irrespective of whether or not it would fit on the previous page.

   b. If a CONTROL HEADING group causes a page advance, the same action occurs as in (a) above, except that the CONTROL HEADING group that caused the page advance is output only once on the new page, whether it has the OR PAGE phrase or not.

   c. If a CONTROL FOOTING group causes a page advance, the same action occurs as for a DETAIL except that no CONTROL HEADINGS below the level of the CONTROL FOOTING are printed.

2. If a group has CH FOR PAGE **without a control-id**, it will be treated as equivalent to **CH FOR PAGE OR REPORT**.

3. The following shows the layout you might require:

```
** HEADING **      PAGE 1
YEAR: 1991
MONTH: 01
........    20
........    30
TOTAL FOR MONTH:      50
MONTH: 02
........    10
........    20
TOTAL FOR MONTH:      30
MONTH: 03
........    20
........    30
........    40
```

(A)

```
** HEADING **      PAGE 2
YEAR: 1991
MONTH: 03
........      50
TOTAL FOR MONTH:    140
MONTH: 09
........      20
........      30
TOTAL FOR MONTH:      50
MONTH: 11
........      20
........      40
........      10
TOTAL FOR MONTH:      70
```

(B)

```
** HEADING **      PAGE 3
YEAR: 1991
MONTH: 12
........    10
........    20
........    30
........    10
........    20
........    30
........    10
........    20
........    30
........    10
TOTAL FOR MONTH:    190
```

(C)

```
** HEADING **      PAGE 4
YEAR: 1991
TOTAL FOR YEAR:    530
YEAR: 1992
MONTH: 01
........      20
........      10
... etc.
```

Note the following labelled points in the diagram:

(A) Because of the **OR PAGE** phrases, **both** CH groups re-appear at the top of the page even though **neither control has changed**.

(B) When a control break occurs and the corresponding CH group will not fit on the current page, it appears **once only** at the **top** of the new page, even though it has an **OR PAGE** phrase.

(C) If a **CF** group causes a page advance, the CH groups are produced at the top of the next page, but only those at the **same level or above** that of the CF group.

The following is the report writer code required to produce this layout:

```
RD  REP-ONE
    PAGE LIMIT 40
    CONTROLS ARE YEAR, MONTH.

01  PH                    LINE 1.
    05  COL 1            "** HEADING **".
    05  COL 19           "PAGE".
    05  COL 21           PIC Z9   SOURCE PAGE-COUNTER.

01  CH FOR YEAR OR PAGE       LINE + 1.
    05  COL 1            "YEAR:".
    05  COL + 2          PIC 9(4)         SOURCE YEAR.

01  CH FOR MONTH OR PAGE      LINE + 1.
    05  COL 1            "MONTH:".
    05  COL + 2          PIC 99           SOURCE MONTH.

01  REP-DET   TYPE DE                     LINE + 1.
    05  COL 1            ".........".
    05 PVAL   COL + 2    PIC ZZZ9         SOURCE WVAL.
```

```
01  TYPE CF FOR MONTH                      LINE + 1.
    05  COL 1           "TOTAL FOR MONTH:".
    05 M-TOT  COL + 2   PIC ZZZ9          SUM OF PVAL.

01  TYPE CF FOR YEAR    LINE + 1.
    05  COL 1           "TOTAL FOR YEAR:".
    05  COL + 2         PIC ZZZ9          SUM OF M-TOT.
```

### 3.24.5 Compatibility

All aspects of the following features are unique to new Report Writer:

- Allowing the TYPE keyword to be **omitted**,
- The optional words **ON** and **FOR**,
- The **OR PAGE** phrase of CONTROL HEADING,
- Default of DETAIL if the TYPE clause is omitted.
- The *multiple* CONTROL FOOTING option.

# 3.25 USAGE clause

This clause is allowed for documentary purposes in the REPORT SECTION, for consistency with basic COBOL, or to emphasize that an entry is *DBCS*.

### 3.25.1

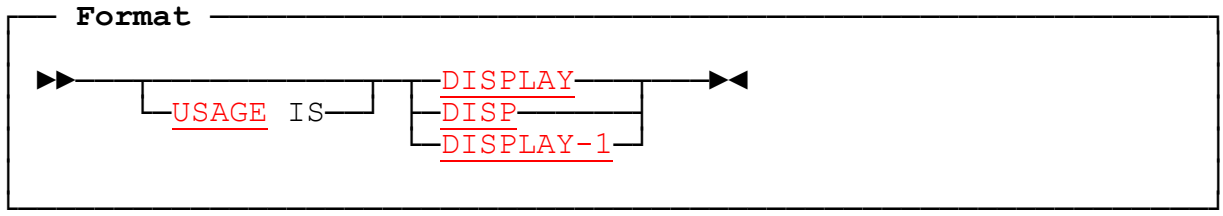


### 3.25.2 USAGE Clause: Coding Rules

1. The USAGE clause may be coded at any level, but **no** item may be subject to **both** USAGE DISPLAY **and** USAGE DISPLAY-1.

2. **DISP** is synonymous with **DISPLAY**.

3. Only *non-DBCS* items may be subject to **USAGE DISPLAY** and only *DBCS* items may be subject to **USAGE DISPLAY-1**.

4. No other forms of the USAGE clause are permitted in the REPORT SECTION.

### 3.25.3 USAGE Clause: Operation

1. DISPLAY is retained for consistency with basic COBOL but it is never required.

2. **USAGE DISPLAY-1** indicates that the item (or items if on a group level) is DBCS (*Double-Byte Character Set*), such as Japanese *Kanji*. However, it is not required in the REPORT SECTION, since it is implied by the presence of a DBCS PICTURE string (containing the symbols **"G"** and **"B"** only) or a DBCS literal, of the form G"*so*...*si*" or G'*so*...*si*' where *so* and *si* are the *shift-out* and *shift-in* characters. *DBCS* items are stored with a *shift-out* character on the left and a *shift-in* on the right. Each double-byte character occupies **one** print column position even though it takes up **two** bytes of memory. COLUMN numbers (absolute or relative) take this into account. Spaces inserted between DBCS items are the regular (non-DBCS) space.

### 3.25.4 Compatibility

OS/VS and DOS/VS COBOL Report Writer and new Report Writer treat USAGE DISPLAY identically. OS/VS and DOS/VS COBOL do not handle DBCS fields.

## 3.26 VALUE clause

This clause may be used whenever the report field to be output consists of a fixed literal value.

### 3.26.1

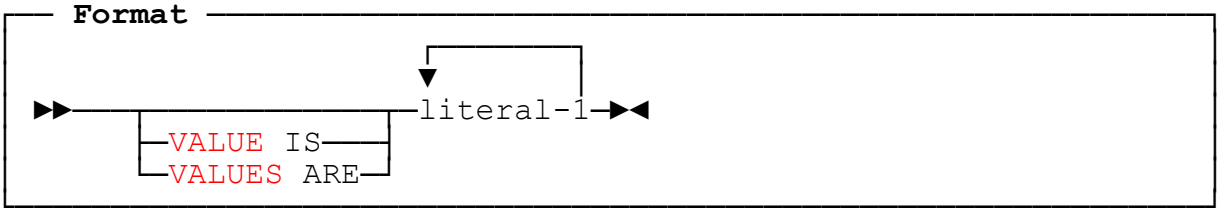


### 3.26.2 VALUE Clause: Coding Rules

1. You may specify a **numeric** or **non-numeric** literal, including a *figurative constant*, or a *DBCS* literal. An *ANS-85* **SYMBOLIC CHARACTER** is also permitted.

2. Unless you specify **ALL** or a *figurative constant*, you do **not** need a **PICTURE** clause. For example:

```
05   COL 21    VALUE "*** ALL-IN SPORTS CLUB ***".
```

   You may use *'apostrophes'* instead of *"quotes"* if your current compiler options expect them. The Precompiler accepts **either** delimiter at the start of a literal, scanning for the **same** delimiter to close the literal. Continued literals are also permitted. As usual, **two quotes juxtaposed** within a *"literal"* signify a **single** quote as part of the value, and similarly for apostrophe.

3. You may use the *ALL "literal"* form or a numeric literal or figurative constant, but in all these cases you must specify a PICTURE. Here is an easy method of coding a repeated value:

```
05   COL 1       PIC X(24)     VALUE ALL "XOX".
```

   which gives you the repeated pattern: XOXXOXXOXXOXXOXXOXXOX

4. If the item is defined as *DBCS* by virtue of its **PICTURE** clause or **USAGE DISPLAY-1** clause, the literal must also be *DBCS*. However a PICTURE clause is **not** required, a PICTURE of **G(n)** where **n** is the number of double bytes being assumed in default.

5. Any literal may also be *hexadecimal*. However, it is inadvisable to use this facility to insert *printer control characters* into your print data, since these will (a) make your program **non-portable** and unreadable (b) put your **COLUMN** positions out of alignment. The **STYLE** clause is designed specifically for this purpose and has none of these drawbacks. (See 3.22 *STYLE clause*.)

### 3.26.3 VALUE Clause: Operation

1. The VALUE clause results in the specified fixed literal appearing in your report field. Assuming that your program does not alter the value by overwriting the report field procedurally (which it can do if the field is named), the value will be unchanged throughout the report.
2. Report writer will either "*pre-set*" (fill in) your report field with the specified *literal* at compile time; or it may *move* the literal into the report field at run time, in cases where the report field is in a variable position, or where the report line cannot hold pre-set values because it is subject to an **OCCURS** clause.
3. If the item is *DBCS*, it is stored in the report line with each double-byte character occupying **one** column position. (See 3.25 *USAGE clause*.)

### 3.26.4 Multiple VALUES

If you use the *multiple* form of the VALUE clause, by writing **more than one literal** after the keyword, it will save you the effort of coding several separate entries. Note the following:

1. If you wish to place no value in a particular occurrence, you may simply code a space character: " ".
2. Your entry must be subject to **at least one** of the following:
   a. A **fixed OCCURS** clause (**not OCCURS...DEPENDING**), or
   b. A **multiple LINES** clause, or
   c. A **multiple COLUMNS** clause.
3. All the literals must be either *DBCS* or *non-DBCS*.
4. The rule for the number of literals allowed in your multiple VALUE is similar to that of the multiple SOURCES clause (see 3.21.4 *Multiple SOURCES*); that is, it must exactly equal either the total number of repetitions in all the dimensions of the entry, or the product of the numbers of repetitions of one or more of the **inner** dimension(s). For example, with the following layout:

```
03  LINE OCCURS 2.
 04  OCCURS 3.
  05  COLS +3, +3, +3, +1        VALUES ARE .....
```

   the number of literals should be either 4 (just the inner dimension), 12 (the product of the inner two dimensions), or 24 (all the dimensions).
5. If the literals cover **more than one dimension**, they are distributed along the innermost dimension, periodically stepping to the next entry in one or more outer dimensions. For example:

```
03  LINES 2     STEP 1   OCCURS 3.
 05  COL   2    STEP 5   OCCURS 4
  VALUES "JAN" "FEB" "MAR" "APR"
         "MAY" "JUN" "JUL" "AUG"
         "SEP" "OCT" "NOV" "DEC".
```

will result in:

```
JAN   FEB   MAR   APR
MAY   JUN   JUL   AUG
SEP   OCT   NOV   DEC
```

6. If there are **two or more dimensions** and the number of terms matches only the **inner** dimension(s), the series of literals is **re-cycled** from the first operand for each of the outer repetitions. For example, the following case:

```
03  LINE OCCURS 4.
 05  COLS 1 13       VALUES
 "THIS YEAR" "SOME TIME".
```

will result in:

```
THIS YEAR     SOME TIME
THIS YEAR     SOME TIME
THIS YEAR     SOME TIME
THIS YEAR     SOME TIME
```

7. The *multiple VALUE* operand may be used as one or more of the alternatives in a *multiple-choice* entry. You need not use a multiple VALUE in every alternative:

```
05  COLS 1 12 25        VALUES
    "BLEU"   "ROUGE"   "JAUNE"     WHEN LANGUAGE = "F"
    "BLAU"   "ROT"     "GELB"      WHEN LANGUAGE = "G"
    "BLUE"   "RED"     "YELLOW"    WHEN LANGUAGE = "E"
    "????"                         WHEN OTHER.
```

8. If, as is usual, you **omit** a PICTURE clause, the size of each field is the size of its corresponding literal, as seen in the following example:

```
05  COLS 1 +2 +2  VALUES "CAESAR" "QUELLED" "VERCINGETORIX".
```

which yields:

```
CAESAR QUELLED VERCINGETORIX
```

This is also true of *multiple-choice* entries.

9. In all cases, you may **omit** the **VALUE** keyword.

10. Other examples of the multiple VALUE clause will be found under 3.4.4 *Multiple COLUMNS Clause* and 3.10.4 *Multiple LINES Clause*).

### 3.26.5 Compatibility

Only new Report Writer provides the following features:

- The VALUE keyword being optional,
- *DBCS* and *hexadecimal* literals in the REPORT SECTION,
- PICTURE clause being **optional** with a non-numeric literal,
- The *multiple* VALUE format.

# 3.27 VARYING clause

This clause enables you to **vary the value of a numeric counter** (typically for use elsewhere as a subscript) during the production of a repeating field.

## 3.27.1

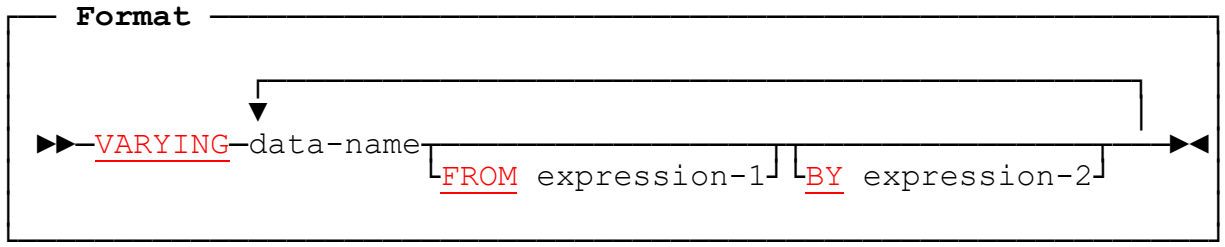


## 3.27.2 VARYING Clause: Coding Rules

1. You may write **any number** of different *data-name* operands in this clause, each with an optional associated **FROM** and **BY** phrase.

2. Your entry must also have **either** an OCCURS clause (see 3.14) **or** a Multiple COLUMNS Clause (see 3.4.4) **or** a Multiple LINES Clause (see 3.10.4).

3. Your *data-names* must not be defined already anywhere else in the program and you should **not** attempt to define them separately. Report writer creates a description for them itself, internally. (This is similar to the way COBOL handles index-names.)

4. You **can re-use the same data-names** in different VARYING clauses, provided that you do not do this when the clauses are **nested** (enclosed one within the other). For example, you could write **VARYING R-LINE** on each repeating LINE, and **VARYING R-COL** on each repeating COLUMN, throughout your program.

5. If you intend **FROM 1**, you may omit the **FROM** phrase and report writer will infer it. Likewise, if you intend **BY 1**, you may omit the **BY** phrase and report writer will infer it. (FROM 1 and BY 1 are the most usual requirements, so these assumptions are convenient.)

6. Each *expression* may be any *integer*, or an *identifier*, or an *arithmetic expression*, provided that the result has an **integer** value. The expression **may** contain data-names of an **enclosing** VARYING clause. It can also use a data-name of the **same** VARYING clause, but only in its **BY** expression. It must **not** contain data-names of an **enclosed** VARYING clause, or of any other VARYING clause. Thus the following are **legal**:

```
a.    05  OCCURS 3  VARYING R-MONTH.
        07   OCCURS 4   VARYING R-INDEX FROM R-MONTH.
b.    05  OCCURS 3  VARYING R-MONTH FROM 1 BY (R-MONTH + 1).
```

but the following are **illegal**:

```
c.          05  OCCURS 3  VARYING R-INDEX FROM R-MONTH.
              07  OCCURS 4  VARYING R-MONTH.
              ...
d.          05  OCCURS 3  VARYING R-MONTH FROM (R-MONTH + 1).
e.          05  OCCURS 3  VARYING R-MONTH.
                ...
            05  OCCURS 3  VARYING R-MONTH FROM R-MONTH.
```

### 3.27.3 VARYING Clause: Operation

1. When report writer is about to produce the **first** occurrence, it places the **FROM** value in an internal named data item set up implicitly by the VARYING clause. This is repeated, in the order given in the clause, for any additional data-names that may have been specified in the VARYING clause.

2. When report writer is about to produce each of the remaining occurrences, it adds the **BY** value to the data item. This is also repeated, in the order given in the clause, for any additional data-names that may have been specified in the VARYING clause.

3. The VARYING clause enables you to produce **different** source-items or values in successive appearances of a repeated field. Here are some examples:

   a. To generate the numbers 1 through 10 in a line:

```
   1    2    3    4    5    6    7    8    9   10
```

```
03  LINE.
 05 COL + 5 PIC Z9 OCCURS 10 VARYING COL-INDEX SOURCE COL-INDEX.
```

   b. To output a **two-dimensional** array in *Working-Storage* into a two-dimensional array in your report (for example daily costs for four seven-day weeks):

```
WEEK 1   $19  $230   $34   $56  $378  $270    $9
WEEK 2  $340  $236   $43   $23  $248    $0  $354
WEEK 3  $120  $134   $58  $442   $98  $739  $121
WEEK 4   $39    $0  $800  $344  $801   $89  $387
```

```
03  LINE    OCCURS 4     VARYING WEEK-NO.
  05  COL 1   "WEEK".
  05  COL 6   PIC 9       SOURCE WEEK-NO.
  05  COL 9   PIC $$$9    OCCURS 7 STEP 6  VARYING DAY-NO
      SOURCE WS-VALUE (WEEK-NO DAY-NO).
```

c. You could display each week's entries from **right to left** by writing:

```
          VARYING DAY-NO FROM 7 BY -1.
```

d. Now let's display the same entries, except that they are all held in a **one**-dimensional array of twenty-eight entries. (This example is **important**.)

```
      03  LINE  OCCURS 4  VARYING START-DAY-NO FROM 1 BY 7,
                                  WEEK-NO FROM 1 BY 1.
        05  COL 1     "WEEK".
        05  COL 6     PIC 9        SOURCE WEEK-NO.
        05  COL 9     PIC $$$9     OCCURS 7 STEP 6
            VARYING DAY-NO FROM START-DAY-NO BY 1
            SOURCE WS-VALUE (DAY-NO).
```

As each week is processed, **START-DAY-NO** takes values 1, 8, 15 and 22. DAY-NO takes the seven values 1 to 7, then 8 to 14, then 15 to 21, then 22 to 28 in turn, each time starting with the new value of START-DAY-NO. In the clause **VARYING START-DAY-NO FROM 1 BY 7**, the phrase **FROM 1** could have been omitted and in the clause **VARYING DAY-NO FROM START-DAY-NO BY 1**, the phrase **BY 1** could have been omitted.

e. To "*fold round*" a large array in *boustrophedon* ("as the ox turns") sequence (if NO-ACROSS is the horizontal repeat factor):

```
03 LINE OCCURS ... TIMES
   VARYING INIT FROM 1 BY ((NO-ACROSS - 1) * INCR) + NO-ACROSS,
           INCR FROM 1 BY (- INCR - INCR).
  05  ...  OCCURS 0 TO 100 TIMES DEPENDING ON NO-ACROSS ...
           VARYING SUBSCRIPT FROM INIT BY INCR
           SOURCE TABLE-ENTRY (SUBSCRIPT).
```

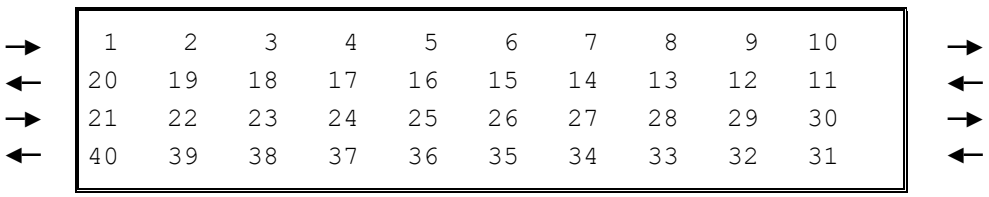

f. To produce a **pyramid-shaped** design:

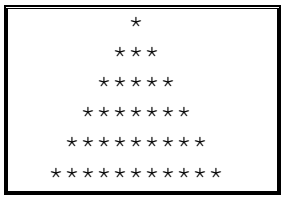


```
03  LINE OCCURS 6     VARYING SUB-1 FROM 5 BY -1
                              SUB-2 FROM 1 BY 2.
  05  COL + 1          OCCURS 0 TO 5 DEPENDING ON SUB-1.
  05  COL + 1   VALUE "*"    OCCURS 1 TO 11 DEPENDING ON SUB-2.
```

g. Note that VARYING can also be used with a *multiple* COLUMN or LINE, as the following example shows:

```
    03  LINES 2 3 4      VARYING LINE-INDEX.
      05  COLS 10 20 31 52   VARYING COL-INDEX   PIC ZZZ9
          SOURCE SALES (LINE-INDEX COL-INDEX).
```

4. To set up a "*running index*" which continues each time from its **latest** value, do **not** code something like **VARYING R-WEEK FROM R-WEEK + 1** , but calculate the starting value explicitly.

5. To give your counter a series of values, say **W-CNT (1)**, **W-CNT (2)**, which are not formed by simple incrementing, write:

```
    VARYING R-MOD FROM 0 BY 1
R-COUNTER FROM W-CNT (1) BY W-CNT (R-MOD) - R-COUNTER
```

6. By experimenting with the VARYING clause, you will discover many novel and surprising uses.

### 3.27.4 Compatibility

The VARYING clause is unique to new Report Writer.

# 3.28 WRAP clause

The WRAP clause is used to produce an automatic *wrap round* to a new continuation line when the next field will not fit on the current line.

## 3.28.1

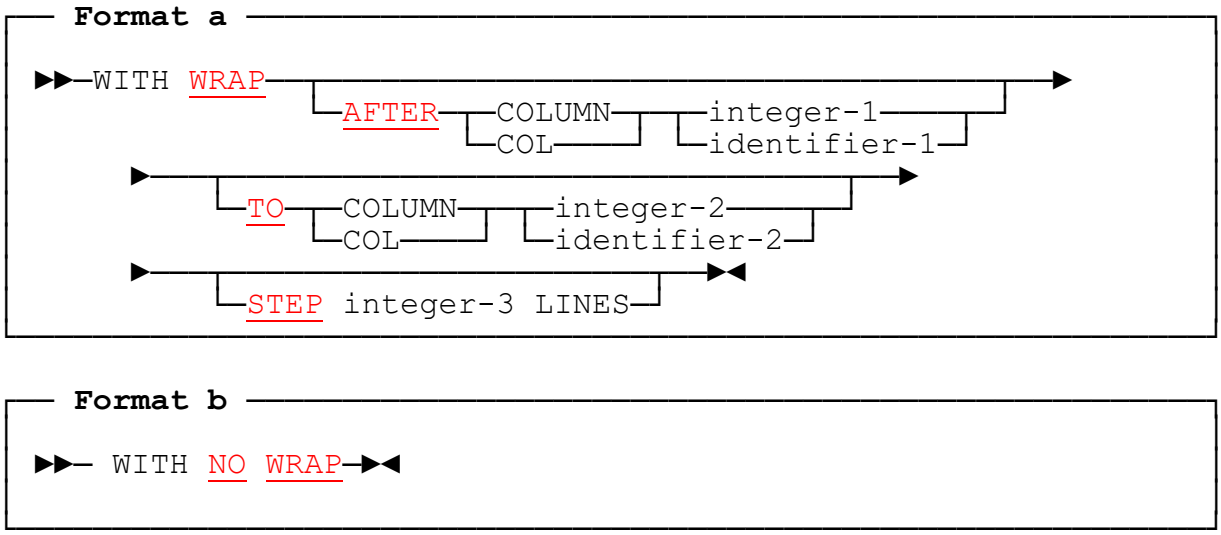


## 3.28.2 WRAP Clause: Coding Rules

1. The **AFTER** phrase gives the rightmost column number that any field may occupy before wrap round becomes necessary. If *integer-1* is specified, it must lie in the range **1** to *maximum line width*. Its value acts as a maximum line width for any lines in its scope. The rightmost column position of every entry with an **absolute COLUMN** must therefore **not** exceed *integer-1*. If *identifier-1* is specified, a similar check is made at run time. If the phrase is omitted, a value of the **LINE LIMIT** is assumed for *integer-1* and, if the *identifier* form of LINE LIMIT is in use, its value will be computed, as usual, at **INITIATE** time. Thus, by default, lines are allowed to reach the **usual page width** before wrap round.

2. The **TO** phrase gives the column number at which printing continues after wrap round. If *integer-2* is specified, it must lie in the range **1** to *maximum line width*. If *identifier-2* is specified, a similar check is made at run time. If the phrase is omitted, a value of **1** is assumed for *integer-2*. Thus, by default, **a line wraps round to column 1**.

3. The **STEP** phrase gives the relative vertical offset for any continuation lines. If the phrase is omitted, a value of **1** is assumed for *integer-3* . Thus, by default, a line is continued onto the **immediately following line**. If a PAGE LIMIT clause is present in the RD, the value of *integer-3* is used by the precompiler in calculating the (maximum) vertical size of the group to check that it will fit correctly into its assigned region of the page.

4. WRAP may be coded either (a) **in an entry containing a LINE clause** or (b) **at a higher level** having one or more LINE entries beneath it. This second possibility allows you to avoid repeating the same clause in several LINE entries.

5. Only **relative** COLUMN entries are allowed to cause wrap round. If a **LINE** entry has a WRAP clause, the **COLUMN** entries forming the description of the line must end in one or more relative COLUMN entries. Entries with **absolute** COLUMN numbers still cannot exceed the maximum line width.

6. A superfluous WRAP clause is **not** permitted. So the COLUMN entries (in particular the trailing relative COLUMN entries) must be such that the LINE LIMIT **could** be exceeded. (If this is not foreseeable at precompilation time, it will be assumed that this could happen at run time.)

7. If the WRAP clause is coded at a **higher level** with more than one LINE entry beneath it, it is sufficient if **at least one** of the LINE clauses obeys these rules. For example, it is permissible to code the WRAP clause at the *01*-level, even if only one of LINE entries in the group can cause wrap round. However, in general any number - even all - the LINE entries in a report may be capable of causing wrap round.

8. The *format b* **NO WRAP** clause is allowed only at a level subordinate to a format **a** WRAP clause. The entry containing **NO WRAP** must represent more than one physical elementary printable field. No other nesting of the clause is permitted.

### 3.28.3 WRAP Clause: Operation

1. The WRAP clause causes data to *wrap round* automatically to a new continuation line when the next field or group of fields will not fit on the line. It may be used in any *TYPE* of report group. The point where wrap round begins is always **after** a complete elementary field. Hence a horizontal "*fit test*" is performed before each field is output, unless it has an **absolute COLUMN** or is known to fit. (Compare the "*page-fit test*" performed in the vertical direction.) If the field's right-hand column would extend beyond the column position given in the **AFTER** phrase, the line is output **without** the field and then space-filled. The field in question is now placed in the new line, starting in the column position given in the **TO** phrase. The initial spacing implied by the "*PLUS integer*" of the COLUMN clause is **ignored**. The vertical line spacing is given by the STEP phrase.

   If the *identifier* form of the AFTER or TO phrase is used, the identifier's current value is used.

   The following complete example shows how a variable number of error messages may be output:

```
            VALIDATION REPORT

 NAME              AMOUNT      DATE      MESSAGE(S)

JONES               A0.00    09/11/89   AMOUNT NON-NUM.
TIMSON              80.00    44/32/89   INVALID DATE
RO%ERS              X0.0Y    44/32/89   NOT ALPHA    AMOUNT NON-NUM.
                                        INVALID DATE
SMITH             100.00     12/01/89
                                  col 36 ↑                  col 64 ↑
```

```
RD  VALIDATION-REPORT
    PAGE LIMIT 60.
01  VALIDATION-DATA    TYPE DE.
  03  LINE + 1         WRAP AFTER COL 64 TO COL 36.
    05  COL 1          PIC X(20)     SOURCE name.
    05  COL 15         PIC X(8)      SOURCE amount.
    05  COL 26         PIC X(8)      SOURCE date.
    05  COL + 3 "NOT ALPHA"          PRESENT WHEN name invalid.
    05  COL + 3 "AMOUNT NON-NUM."    PRESENT WHEN amount invalid.
    05  COL + 3 "INVALID DATE"       PRESENT WHEN date invalid.
```

The phrase **AFTER COL 64** gives the last column that can be occupied by any field in the line. The phrase **TO COL 36** gives the starting column for the wrap round. **STEP 1** is assumed in default, so continuation is onto the next line. Note that the initial spacing implied by the **"+ 3"** of the first COLUMN clause on the new line is ignored.

2. As well the *conditional* case just described, where the continuation line appears in exceptional circumstances, it is possible (though less useful) for the wrap round to occur every time, as in this example:

```
03  LINE + 2      WRAP AFTER COL 30 TO COL 11.
  05  COL 1       PIC X(30)     SOURCE W-SURNAME.
  05  COL + 3     PIC X(20)     SOURCE W-GIVEN-NAME (1).
  05  COL + 3     PIC X(20)     SOURCE W-GIVEN-NAME (2).
```

which is exactly equivalent to:

```
03  LINE + 2.
  05  COL 1      PIC X(30)     SOURCE W-SURNAME.
03  LINE + 1.
  05  COL 11     PIC X(20)     SOURCE W-GIVEN-NAME (1).
  05  COL + 3    PIC X(20)     SOURCE W-GIVEN-NAME (2).
```

3. Horizontal Fit Test

The "*fit test*" takes into account a field's variable length. By changing the PICTUREs in the previous example to make them variable length, we have the following, more common, situation:

```
01  FULL-NAME     TYPE DE.
  03  LINE + 2    WRAP AFTER COL 30 TO COL 11.
    05  COL 1     PIC X<X(29)>    SOURCE W-SURNAME.
    05  COL + 3   PIC X<X(19)>    SOURCE W-GIVEN-NAME (1).
    05  COL + 3   PIC X<X(19)>    SOURCE W-GIVEN-NAME (2).
```

The following sample output shows one of each possible outcome:

```
JONES   THOMAS   EDWARD

PIETRASZEWSKI   HILDEGAARD
           GRAZYNA

HAUBENSTOCK-MASTELLONE
           FERRUCCIO   EMILIO

PILGERSTORFER-TARTSHOFF
           PHILOMELA
           CLYTAEMNESTRA
```

The longer names in this layout are a good example of the rare conditions that have to be allowed for, but which, without this special feature, often take up a disproportionate amount of programming effort.

4. If the containing group is a body group beginning with a **relative** LINE clause, the continuation lines are taken into account during the group's page-fit test. For example, if only **two** lines are available for the printing of the last group in the preceding example, a new page would be started:

```
PILGERSTORFER-TARTSHOFF
           PHILOMELA
           CLYTAEMNESTRA
```

whereas in all the other instances the group would fit on the current page.

5. When an OCCURS clause or a Multiple LINES Clause is coded at the same level as WRAP, the WRAP clause applies **separately to each occurrence**.

6. **NO WRAP** indicates that the entries subject to NO WRAP **must appear together** in the same line. The horizontal *"fit test"* is therefore performed **before the entire set** of fields is output to ensure that they are not to split over a line boundary. (Compare **NO MULTIPLE PAGE** which does the same for the page boundary.) When an **OCCURS** clause is coded at the same level as NO WRAP, the NO WRAP clause applies **separately to each occurrence**. The following example lists names across several lines, keeping initials and surnames together:

```
RD  NAMES-LIST
    PAGE LIMIT 60
    LINE LIMIT 40.
01  NAMES-GROUP   TYPE DE.
 02  LINE + 2     WRAP.
  03  NO WRAP     OCCURS 1 TO 50 TIMES DEPENDING ON NO-OF-NAMES
      VARYING R-NAME-NO.
   04  COL + 1    OCCURS 4 TIMES VARYING R-INTL-NO
                  PIC X"." SOURCE W-INTL (R-NAME-NO R-INTL-NO)
               ABSENT WHEN W-INTL (R-NAME-NO R-INTL-NO) = SPACE.
   04  COL + 2    PIC <X(20) SOURCE W-SURNAME (R-NAME-NO).
   04  COL + 2.
```

```
J. SMITH  P.J. ROBINSON  E.G.H. MARSHALL
P. TOMLINSON  E.T. MILLINGTON
F.L.J. LAVENSTEIN
```

### 3.28.4 Compatibility

The WRAP clause is unique to new Report Writer.

# 4

# Procedural Statements

COBOL Report Writer will not act until your program executes a procedural statement. Three main commands or "*verbs*", **INITIATE**, **GENERATE**, and **TERMINATE**, are sufficient to produce most of the output from your Report Descriptions. **INITIATE** and **TERMINATE** are performed at the beginning and the end, respectively, of the processing for your report; while **GENERATE** is executed repeatedly, producing one **DETAIL** (except in *summary reporting*), preceded by any of the other *TYPEs* of group that may be needed as page breaks and/or control breaks are encountered.

As with the two preceding parts, users migrating from OS/VS or DOS/VS COBOL may refer to the *Compatibility* paragraph following each section.

# 4.1 Report Writer Verbs: Overview

The three main report writer verbs **INITIATE**, **GENERATE**, and **TERMINATE** may be used in the same way as any other COBOL verb and may be used anywhere in the program **except** in a *USE BEFORE REPORTING Declarative SECTION*.

Of the remaining procedural statements, the USE BEFORE REPORTING directive (see 4.7) enables you to write a section of code in the **DECLARATIVES** portion that is to be performed automatically just before the specified report group is output, and the Report Writer SET statements (see 4.4) make it possible to place report groups irregularly on the page.

## 4.1.1 Sequence of Operations

For a single report using a simple file as input, the normal sequence of operations is as follows:

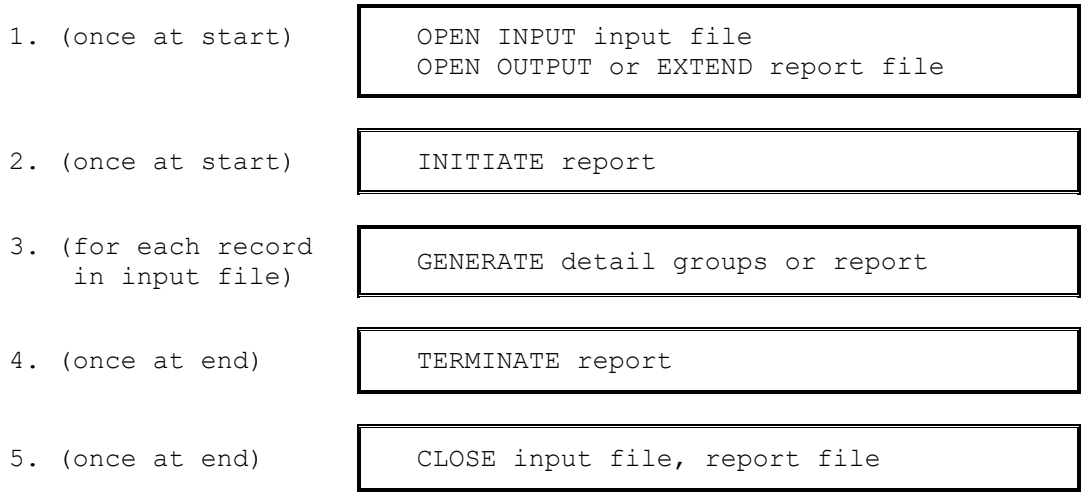


with the following basic plan for the PROCEDURE DIVISION:

```
           OPEN INPUT input-file OUTPUT report-file
           INITIATE report-name
           read first input record
           PERFORM UNTIL END-OF-FILE = 1
                GENERATE detail-group
      *       or GENERATE report-name if doing summary reporting
                read next input record
           END-PERFORM
           TERMINATE report-name
           CLOSE input-file report-file
```

### 4.1.2 Keyword Table

The following table lists the **PROCEDURE DIVISION** elements associated with COBOL Report Writer with a summary of their purposes. The third and fourth columns tell you whether or not the item is part of the current standard (ANS 85) COBOL and, if so, whether *COBOL Report Writer* extends the facilities.

Report Writer Verbs: Keyword Table

| Keyword | Purpose | OS/VS DOS/VS COBOL? | Extensions to OS/VS and DOS/VS COBOL |
|---|---|---|---|
| **INITIATE** | Prepares report for processing | **yes** | ▫ INITIATE...UPON file-name<br>▫ report may be GLOBAL |
| **GENERATE** | Handles main report processing | **yes** | ▫ improved order of totalling, page-fit and DECLARATIVES if NOOSVS option used<br>▫ report may be GLOBAL |
| **TERMINATE** | Concludes all processing for report | **yes** | ▫ report may be GLOBAL |
| **USE BEFORE REPORTING** | Invokes SECTION in DECLARATIVES when named report group is printed | **yes** | ▫ may specify DETAIL group<br>▫ may be GLOBAL |
| **SUPPRESS PRINTING** | Prevents data being printed for a report group | **no** | |
| **MOVE 1 TO PRINT-SWITCH** | Alternative to SUPPRESS PRINTING | **yes** | |
| **SET PAGE/ LINE/COLUMN** | Controls PAGE BUFFER operations | **no** | |

# 4.2 GENERATE statement

The **GENERATE** statement is COBOL Report Writer's main verb for the production of output. It passes control to report writer to allow it to perform all the necessary mechanical tasks, including any *control-break* and *page-break* processing needed before producing all the lines and fields described in your DETAIL group, if specified.

### 4.2.1

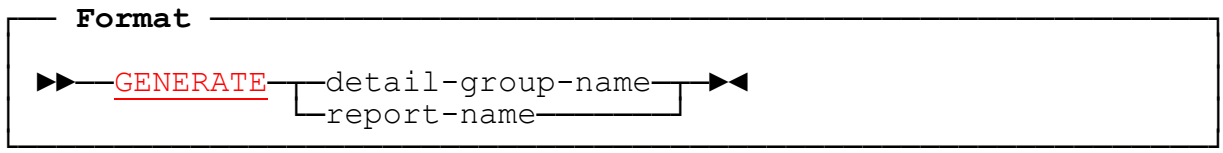


### 4.2.2 GENERATE Statement: Coding Rules

1. If **GENERATE detail-group-name** is coded, it must be the name of a **DETAIL** group coded in the current program, or in a **GLOBAL** report defined in a containing program. (The *group-name* appears immediately after the *01* level-number.) You may qualify the detail-group-name with the report-name, as in: GENERATE MAIN-DETAIL **IN SUMMARY-REPORT**. This is necessary if your *detail-group-name* is not unique in the REPORT SECTION.
2. The form **GENERATE report-name** has a special significance and is known as **summary reporting**. It causes any DETAIL group to be suppressed, so do not use this form unless you require only **CONTROL HEADING** or **CONTROL FOOTING** groups in the body of the report at the point that you execute the GENERATE. If you use this form, you must have **at least one** CONTROL HEADING or CONTROL FOOTING group in the report.
3. GENERATE must **not** appear in a USE BEFORE REPORTING directive Declarative.

### 4.2.3 GENERATE Statement: Operation

1. The **GENERATE** statement causes report writer to perform three main actions in an average report:
   a. It tests for control breaks, producing CONTROL FOOTING and HEADING groups where necessary,
   b. It performs a page-fit test, outputting PAGE FOOTING and PAGE HEADING groups where necessary; (these may also be produced as a result of a CONTROL HEADING or CONTROL FOOTING),
   c. It generates each line in the DETAIL group, unless you are doing summary reporting (GENERATE report-name).
2. Once a report has been *INITIATEd*, your program may execute any number of GENERATE statements for each DETAIL group in the report. If your *Report Description* contains several DETAIL groups, you may code a sequence of different GENERATE statements in any part of the program and, in this way, build up any required report layout. You may also write a GENERATE for the same DETAIL group in more than one place in the program.

3. **Summary reporting**, where you code the *report-name* instead of a **DETAIL** *group-name* after the GENERATE, has the following effects:

   a. **No DETAIL group** is output.

   b. Any **rolling forward** of SUM operands takes place as usual, except for any rolling forward **from** a DETAIL group.

   c. Any **cross-footing** of SUM operands takes place as usual, except for cross-footing within a DETAIL group.

   d. Any **subtotalling** of (non-REPORT SECTION) SUM operands is executed as follows:

      i. If SOURCE SUM correlation is in effect, **all** the SUM operands that correspond to a SOURCE operand in a DETAIL group are added into their totals, as though you had *GENERATEd* **each DETAIL group in turn**. Any non-REPORT SECTION SUM operands that do **not** correspond to a SOURCE operand are added into the totals once.

      ii. If SOURCE SUM correlation is **not** in effect, the SUM operands are added into the totals once.

   e. Testing for **control breaks** takes place as usual. If a control break is detected, any CONTROL FOOTING and/or CONTROL HEADING groups are output as usual, together with any PAGE FOOTING and/or PAGE HEADING groups that may be required as the result of a page advance.

   The **GENERATE report-name** statement can therefore only produce output (a) on the **first** GENERATE after an INITIATE, and (b) **after a control break**.

   Between an **INITIATE** and **TERMINATE**, your program may execute **both** the GENERATE *report-name* and the GENERATE *group-name* forms of the statement.

   The following example illustrates the different effects of the GENERATE *report-name* and GENERATE *group-name* clauses:

```
     SPORTS CLUB CASHBOOK
     DATE          AMOUNT

     JAN 4          $20.00
     JAN 16         $10.00
     JAN 30        $195.00
     -------       -------
     JAN TOTAL:    $225.00

     FEB 12         $10.00
     FEB 19         $55.00
     -------       -------
     FEB TOTAL:     $65.00
```

```
RD  CASHBOOK ...

01  CASH-LINE  DE.
  ...
    05  COL 31 PIC $(4)9 SOURCE AMOUNT.
01  CF FOR MONTH.
  ...
    05  COL 31 PIC $(4)9 SUM OF AMOUNT.
  ...
    GENERATE CASH-LINE
```

```
     SPORTS CLUB CASHBOOK
     DATE          AMOUNT

     -------       -------
     JAN TOTAL:    $225.00

     -------       -------
     FEB TOTAL:     $65.00
```

```
RD  CASHBOOK ...

*(Same REPORT SECTION as above.)

    GENERATE CASHBOOK
```

### 4.2.4 GENERATE Processing Cycle

The following is a more thorough description of each stage in the execution of a GENERATE statement:

1. If the **identifier** form of the LAST DETAIL sub-clause is used, its value is checked and, if valid, is stored in the Report Control Area.

2. If your report is associated with a DUPLICATED file, the value of *REPORT-NUMBER* is examined to see whether it is the same as it was for the previous GENERATE for this report, thus checking that the correct duplicate of the report is in the main *Report Control Area*. If not, this is swapped in.

3. If the report has not yet been *INITIATEd*, run time error diagnostic 14 is logged.

4. If this is the **first GENERATE** since the INITIATE:

   a. If there is a **REPORT HEADING** group, this is produced.

   b. If there are any **CONTROL HEADING** groups, each of them is produced, from highest down to lowest, and the initial value of each control is saved.

5. If this is **not** the first GENERATE since the INITIATE, each *control identifier* is compared with the corresponding saved previous value, beginning with the highest level. If no control has changed, no special action takes place. If a difference in value (a *control break*) is detected, comparison ceases and the following control break action takes place:

   a. The value of each *control-id* is temporarily altered to the value it had immediately before the control break;

   b. CONTROL FOOTING groups are produced, from the lowest up to the one at the level of the control break, if any;

   c. The value of each *control-id* is restored to its value after the control break;

   d. CONTROL HEADING groups are produced from the one at the level of the control break, if any, down to the lowest.

   Since CONTROL HEADING and CONTROL FOOTING groups are independent report groups in their own right, several of the same operations described below will be applied to them as for a DETAIL group, namely: the output of any pending **REPEATED** groups, page-fit test, storing of the latest value of the CODE (not done for CONTROL FOOTINGs), all types of totalling, performing of USE BEFORE REPORTING section, production of print lines and clearing of totals, plus the setting on of any **PRESENT AFTER** (or GROUP INDICATE) flags, when appropriate.

6. If there are any **REPEATED** groups in this report other than the current DETAIL, a check is made whether any have been buffered. If so, they are first output and the buffer is cleared.

7. If there are any **cross-foot totals** for this group, they are computed in the order implied by any inter-dependencies among them.

8. If **OSVS is in effect** any additional summing is now performed for the group with the following possible actions:

   a. If there is any general "subtotalling" for the report (**SUM** clauses with non-REPORT SECTION operands, without **UPON**, and with **no SOURCE SUM correlation**), each SUM's operands are added into the total fields. If you are generating a DETAIL group which is **absent** because of a PRESENT/ ABSENT WHEN/AFTER clause in the 01-level entry, this general subtotalling is also skipped.

   b. If there is any special subtotalling triggered by this DETAIL group due either to an **UPON** phrase referring to this group or to **SOURCE SUM correlation** that implies this group, the SUM operands are added into the total fields.

   c. If there is a SUM clause in another group referring to an entry in this group, then rolling forward of values into its total field takes place.

9. If there is a **USE BEFORE REPORTING** section for this group in the *DECLARATIVES*, it is performed. If **PRINT-SWITCH** is non-zero as a result (meaning that printing is to be *SUPPRESSed*), then

    a. If **OSVS** is in effect no further action takes place for this group;

    b. If **NOOSVS** is in effect in effect then if **no** further totalling to be performed for this group, no further action takes place; otherwise the only further steps to be performed are 10 (**PRESENT** at 01-level), if applicable, and 8 (totalling).

10. If there is a **PRESENT/ABSENT WHEN** or **PRESENT/ABSENT AFTER** clause at the *01*-level of this group, a test is made of the condition and, if the group is *absent* then

    a. If **OSVS** is in effect no further action takes place for this group;

    b. If **NOOSVS** is in effect then, if there is **no** general subtotalling to be performed, no further action takes place; otherwise the only further step to be performed is 4.2.4 8a above (general subtotalling).

11. If there is an identifier form of a CODE clause in the RD, the contents of the *identifier* are moved to the **CODE-VALUE** location in the *Report Control Area* .

12. If this group has a **REPEATED** clause, the REPEATED buffer is prepared to receive the next instance of the group or, if this group is the last of the set, to produce the buffered groups alongside it.

13. If any lines are being produced and the report has a **PAGE** clause, a *page-fit test* is performed to test *LINE-COUNTER*, to establish whether or not a page advance is required before the group may be output. If the group has a **MULTIPLE PAGE** clause, this test is performed for the first and each subsequent line (or group of lines with NO MULTIPLE PAGE).

14. If a **page advance** is required, the following action takes place:

    a. The **PAGE FOOTING** group is produced, if one exists;

    b. **PAGE-COUNTER** is incremented by 1;

    c. A **form feed** is output or, if an Independent Report File Handler is in use, a value of zero is placed in the *current position* location to cause this;

    d. The **PAGE HEADING** group is produced, if one exists;

    e. If there are any **CONTROL HEADING** groups specifying **OR PAGE**, they are produced, from highest down to lowest.

15. If **NOOSVS** is in effect and there is any further summing to be performed for this group, step 8 (subtotalling and rolling forward) is now executed.

16. Each report line field is stored in its report line, invoking **FUNCTION** routines where necessary and checking for column overlap, line overflow and any other possible error conditions, and then output. If an Independent Report File Handler is in use, it is invoked; otherwise, report writer issues a *WRITE* for each report line. In either case, *LINE-COUNTER* is first set to the target line position just before each line is produced.

17. If the group has a **NEXT GROUP** clause, LINE-COUNTER may be adjusted in accordance with the rules for that clause. (See *NEXT GROUP clause*.) In the case of NEXT GROUP absolute, this may be deferred by setting the *Saved Next Group Integer*.

18. All total fields defined in this group are reset to zero, unless they are not *PRESENT* during this GENERATE or have a **RESET** phrase that defers resetting to a higher control break.

19. If there are any PRESENT AFTER (or GROUP INDICATE) clauses in the group, their indicators are set *off*.

### 4.2.5 Compatibility

1. The coding rules for the GENERATE are identical for *OS/VS* COBOL, *DOS/VS COBOL* and new Report Writer. The GENERATE statement may perform many more steps, but only because of the additional functions provided by new Report Writer.

2. Access to a *GLOBAL* report is not available with *OS/VS* or *DOS/VS* COBOL.

# 4.3 INITIATE statement

The **INITIATE** statement must be the first report writer statement to be executed for a report.

## 4.3.1

**Format**

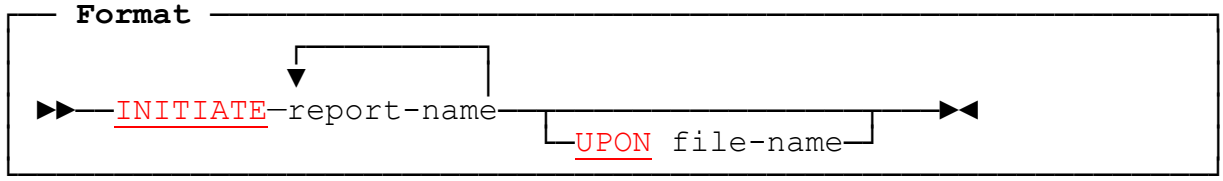


## 4.3.2 INITIATE Statement: Coding Rules

1. Each *report-name* must be the name of a report in the current program, or that of a **GLOBAL** report defined in a containing program. (The *report-name* appears immediately after the **RD** level-indicator and also in the **REPORT** clause in the FD.)

2. If the **UPON** phrase is present, each report-name must be defined in a **REPORT(S)** clause in the FD of the specified *file-name*. The UPON phrase **must** be used if any of the report-names is defined in more than one FD entry.

3. **INITIATE** must **not** appear in a USE BEFORE REPORTING directive *Declarative*.

## 4.3.3 INITIATE Statement: Operation

1. An INITIATE **must** be executed for a report before any GENERATE, INITIATE, or Page Buffer SET verb referring to the same report (or a DETAIL in the report) is executed.

2. An **OPEN** for the corresponding report file must have been executed before the INITIATE is executed. The INITIATE does **not** OPEN the file. You may however execute an INITIATE once again for a report that was TERMINATEd without closing and re-opening the file. This fact may be used repeatedly to obtain REPORT FOOTING and REPORT HEADING groups in the interior of the report, or to obtain a fresh page with *PAGE-COUNTER* reset to 1.

3. A **CLOSE** must **not** be issued for the file to which a report is directed once the report has been INITIATEd, unless a **TERMINATE** is first done.

4. If an **UPON** phrase is present, the report will be written only to the file specified.

## 4.3.4 INITIATE Processing Cycle

The following is a more thorough description of each stage in the execution of an INITIATE statement:

1. The *error flag* is cleared.

2. If your report is associated with a **DUPLICATED** file and *REPORT-NUMBER* is zero, the remaining actions are performed for every duplicate report.

3. If your report is associated with an Independent Report File Handler, the file handler is invoked with an action code of 6.

4. If the *identifier* form of a **LINE LIMIT** clause was coded, the identifier is checked and, if valid, stored in the *Report Control Area*.

5. Other internal locations and special registers, such as the *current position*, "body group has appeared on page" indicator, REPEATED-COUNTER, and PAGE-COUNTER are cleared.

6. **LINE-COUNTER** is reset to zero.

7. **PAGE-COUNTER** is set to 1.

8. All total fields, sum overflow indicators, size error indicator and *Saved Next Group* integer, and PRESENT AFTER indicators, wherever appropriate, are cleared to zero.

9. The *control break indicator* is set to -1 to indicate "initial control break on INITIATE".

10. If a run time subroutine is used for control-break detection, the lengths of each control identifier (other than REPORT/FINAL) are determined and stored in a control area.

### 4.3.5 Compatibility

1. The coding rules for the INITIATE are identical for *OS/VS COBOL* and *DOS/VS COBOL* Report Writer, and new Report Writer. The INITIATE statement may perform additional actions if new Report Writer functions have been used in the Report Group Descriptions.

2. Access to a *GLOBAL* report is not available with OS/VS or DOS/VS COBOL.

3. The **UPON** phrase is not supported by OS/VS or DOS/VS COBOL.

## 4.4 Report Writer SET statements

These statements enable you to *hold* the current page, in whole or in part, and/or fill it in an **irregular** fashion.

### 4.4.1

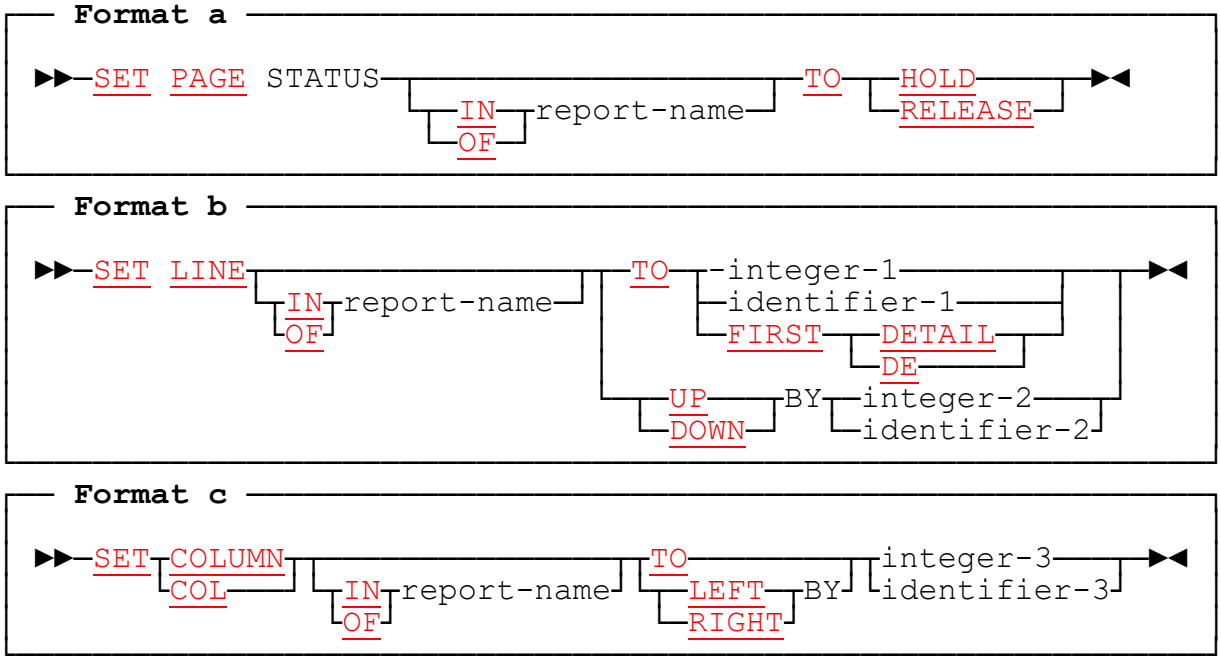


### 4.4.2 SET Statements: Coding Rules

1. *Format a* (**SET PAGE**) cannot be used unless there is (a) a **WITH PAGE BUFFER** clause in the SELECT ... ASSIGN clause for the associated file and (b) a **PAGE LIMIT** clause in the associated RD entry. (The Page Buffer feature uses an *Independent Report File Handler* to produce the report output and will assume **MODE PRNT** if there is no MODE specified in your SELECT ... ASSIGN clause. File handlers are described later (see 5.3 *Independent Report File Handlers*).)

2. The **SET LINE** and **SET COLUMN** statements cannot be used unless there is either a **WITH PAGE BUFFER** clause or a **WITH RANDOM PAGE** clause in the SELECT ... ASSIGN clause.

3. If your program contains more than one *Report Description*, you must qualify your SET PAGE STATUS, SET LINE and SET COLUMN statements by **IN** or **OF report-name** . Without qualification, the statements are assumed to refer to your one and only Report Description.

4. *Format b* (**SET LINE**) is used for altering the value of *LINE-COUNTER*. **SET LINE TO ...** sets LINE-COUNTER equal to the value given and forces the next line to appear there. You can use the FIRST DETAIL form with the TO phrase. **SET LINE DOWN BY ...** adds to LINE-COUNTER, while **SET LINE UP BY ...** subtracts from it. In each case, the value that results must not be less than the FIRST DETAIL value and must not be greater than the LAST DETAIL value (or their defaults; see 2.9 *PAGE LIMIT clause*). If you use SET LINE to **decrease** LINE-COUNTER, your report's PAGE STATUS must be **HOLD**.

5. *Format c* (**SET COLUMN**) is used for altering the value of the horizontal margin. **SET COLUMN TO ...** sets it equal to the value given. **SET COLUMN RIGHT BY ...** adds to it, while **SET COLUMN LEFT BY ...** subtracts from it. In each case, the value that results must not be less than one and must not be greater than the LINE LIMIT, and any group produced must fit within the LINE LIMIT when the new left margin, resulting from SET COLUMN, is taken into account.

6. You cannot use any of these SET statements until a report is in an INITIATEd state.

### 4.4.3 SET Statements: Operation

1. The **Page Buffer facility** is designed to cope with the type of layout where you may not wish to store the groups starting at the top and working down to the bottom of the page. Look at the following layout, for example:

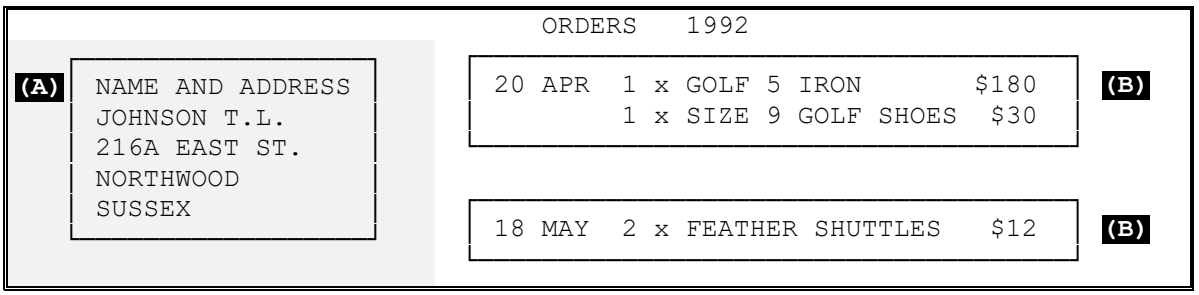


Because groups A and B can be of any size, it is practically impossible to define the layout line-by-line. The design has an attractiveness born of a revolt against slavish acceptance of the dictum that "printers cannot move backwards". The best way to take advantage of the facility is to *GENERATE* report groups as their data becomes conveniently available, addressing the page in random-access fashion. The Page Buffer facility enables you write code such as:

```
SET PAGE STATUS TO HOLD
GENERATE (A)
SET LINE TO FIRST DETAIL
SET COL RIGHT BY 20
GENERATE (B)
GENERATE (B) ...
```

In fact, using this facility, you may return to any part of the page. You may also shift a group *laterally* (left or right) using SET COLUMN.

2. **SET PAGE STATUS (Format a)**

   The **HOLD** option places your report in *HOLD status*. It will stay in HOLD status until you issue a **SET PAGE STATUS TO RELEASE** or until the report is *TERMINATEd*. When your report is in HOLD status, all the lines produced are stored in a *page buffer* instead of being output, giving you the opportunity to return to a previous higher position at any time.

3. You can issue the **SET PAGE STATUS TO HOLD** at any time - not just at the start of the page. You can then return to any vertical position on or below the position where you issue this command.

4. You may use the SET statements in a *Declarative section*. In this way you may re-position a non-DETAIL report group such as a CONTROL FOOTING, HOLD the page at the start of a PAGE HEADING, and so on.

5. When the report is in HOLD status, **LINE-COUNTER** advances as usual. Report writer performs the *page-fit test* on body (DETAIL and CH/CH) groups in the normal way by checking the value of LINE-COUNTER against the size of the group about to be printed. If the group cannot be fitted on the page, report writer will execute a page advance **despite the HOLD status**. **NEXT GROUP NEXT PAGE** and **LINE NEXT PAGE** work as normal. When a page advance takes place, all the lines in the page buffer are first printed. **No data will be lost**. The new page will still have HOLD status.

6. HOLD status does not change any of the logical processes of report writer. It just makes it **legal** for you to return to a higher line using the SET LINE statement. HOLD status only defers the actual time when output occurs, but the end result is always the same. For efficiency, the best time to *RELEASE* a page is just after the last **upward** SET LINE on a page.

7. You cancel HOLD status by means of the **SET PAGE STATUS TO RELEASE** statement. The page buffer will then gradually be emptied as you write more lines, until such a time as a page advance takes place or the report is TERMINATEd.

8. **SET LINE (Format b)**

   The **DOWN** and **UP** options increase or decrease *LINE-COUNTER* by the amount stated. The **TO** option is used to place your next group in a **fixed** vertical position. For example, if your next group begins at absolute line 6 and your report has passed line 6, you may issue **SET LINE TO 6**. (If you do **not** do this, a page advance will take place.) Similarly, if you *GENERATE* groups with relative lines and wish to return to the FIRST DETAIL position that has a value of 6, then again you would issue SET LINE TO 6. The **SET LINE TO FIRST DETAIL** option is available as an alternative way of stating this.

   The effect of SET LINE is cancelled by a page advance (except before the first page - SET LINE can therefore be done immediately after INITIATE).

9. **SET COLUMN (Format c)**

This statement changes the value of your report's **left margin**. If you have **not** issued a **SET COLUMN** statement, the margin will be **1**. This is the *normal* value, indicating that the horizontal position is not to be shifted. The **RIGHT** and **LEFT** options increase or decrease the setting of the left margin, while the **TO** option sets the margin to the value you specify. Your report does not need to be in *HOLD status* for you to use this statement.

10. If the left margin has been set greater than 1, all the lines produced for the current page will be **shifted to the right** by the additional factor. For example, if you issue **SET COLUMN TO 5**, then "COLUMN 1" in any print line is actually positioned on column **5**.

11. When report writer executes a page advance it **resets** the left hand margin to **1**. Your SET COLUMN statements are therefore effective **only within the current page**.

12. All formats

Using the **SET LINE** and **SET COLUMN** statements, you can now re-position your group to any position on the page. You can fill th`e page in any manner. Your groups may overlap, provided that you do not overwrite a character in the page buffer with a different character. Spaces are excluded from this rule. Spaces behave as **"cellophane"**, not as **"white-out"**, so you can overwrite with a space without losing what was there before. You can also overwrite a character with the **same** character. In all other cases, the file handler will signal a run time message.

13. The example on the following page shows how you may set up a page in **"snaking columns"** and then place a border around the whole page:

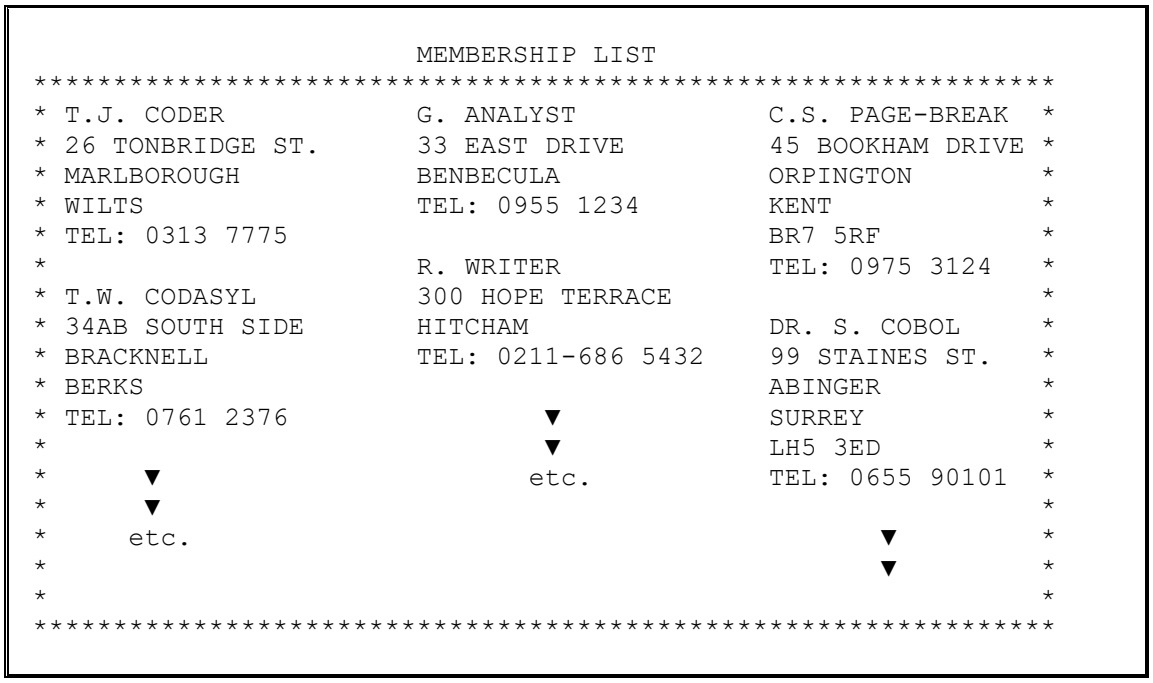


The following coding is suitable for this problem:

```
 RD  MEMBERSHIP-LIST
     FIRST DETAIL 2
     PAGE LIMIT 60
     LINE LIMIT 132.
*
 01  TYPE PH   LINE 1     COL 40     VALUE "MEMBERSHIP LIST".
*
 01  NAME-ADDR-BLOCK  TYPE DE.
   03 LINE + 2  COL 3  PIC X(32)  SOURCE NAME.
   03 LINE + 1  COL 3  PIC X(32) SOURCE ADDR-LINE (ADDR-LINE-NO)
  OCCURS 1 TO 7 DEPENDING ON ADDR-LINE-CNT VARYING ADDR-LINE-NO.
   03  LINE + 1   COL 3   PIC X(32)  SOURCE TEL-NO.
*
 01  BORDER  TYPE DE.
   03  LINE 2     PIC X(132)         VALUE ALL "*".
   03  LINE +1    OCCURS 57.
     05  COL 1    VALUE "*".
     05  COL 132  VALUE "*".
   03  LINE +1    PIC X(132)         VALUE ALL "*".
```

```
*
 PROCEDURE DIVISION.
 ...
     open all files
     INITIATE MEMBERSHIP-LIST
     SET PAGE STATUS TO HOLD
     fetch first record
     MOVE 1 TO MAJOR-COL-COUNT
     PERFORM GENERATE-GROUP UNTIL EOF = 1
     TERMINATE MEMBERSHIP-LIST
     close all files
     STOP RUN.
*
 GENERATE-GROUP.
*TEST WHETHER THE GROUP WILL FIT ON THE PAGE
     IF   LINE-COUNTER + ADDR-LINE-CNT > 57
          PERFORM CHANGE-MAJOR-COLUMN.
          GENERATE NAME-ADDR-BLOCK.
          (read next record or set EOF = 1 if end of file).
 CHANGE-MAJOR-COLUMN.
*IF WE ARE ALREADY IN THE 3RD COLUMN, PRINT THE "BORDER"
*AND ALLOW PAGE TO ADVANCE, RETURNING US TO FIRST MAJOR COLUMN
*OTHERWISE MOVE RIGHT TO TOP OF NEXT MAJOR COLUMN
     SET LINE TO FIRST DETAIL
     IF   MAJOR-COL-COUNT = 3         *> Finish the page
          SET COLUMN TO 1
          SET PAGE STATUS TO RELEASE  *> For efficiency
          GENERATE BORDER
          SET PAGE STATUS TO HOLD
          MOVE 1 TO MAJOR-COL-COUNT
     ELSE SET COLUMN RIGHT BY 40
          ADD 1 TO MAJOR-COL-COUNT.
```

### 4.4.4 Compatibility

These forms of the SET statement are unique to new Report Writer.

# 4.5 SUPPRESS PRINTING statement

The SUPPRESS PRINTING statement enables you to **prevent** a particular report group from being output on a particular occasion.

## 4.5.1

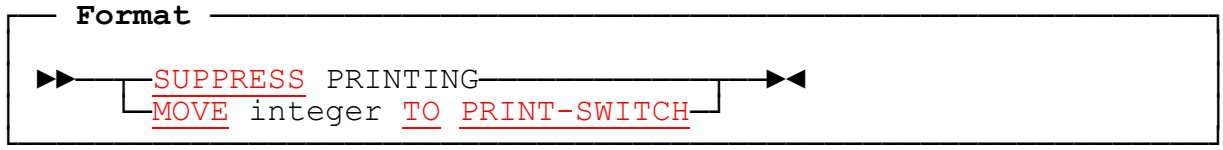


## 4.5.2 SUPPRESS PRINTING Statement: Coding Rules

1. The **SUPPRESS** statement may be coded only in a USE BEFORE REPORTING directive Declarative SECTION (see 4.7).

2. The form **MOVE 1 TO PRINT-SWITCH** is an alternative IBM extension that means the same as SUPPRESS PRINTING. You may also write **MOVE 0 TO PRINT-SWITCH** to undo the effect of a MOVE 1 TO PRINT-SWITCH or SUPPRESS PRINTING, and generally treat PRINT-SWITCH as a numeric location, implicitly defined in your program.

## 4.5.3 SUPPRESS PRINTING Statement: Operation

1. The statement **SUPPRESS PRINTING** or **MOVE 1 TO PRINT-SWITCH** prevents the group specified in the USE BEFORE REPORTING from producing any output on this occasion. In other words, no data is set up in any of the lines of the group and none of the lines is produced. *LINE-COUNTER* is also left unaltered, so suppressing a body group will prevent a page advance. This statement suppresses **only** the storing of report data and the output of the report lines. It does **not** prevent other processing, such as the accumulation and clearing of totals and the setting and testing of CONTROL fields. In this respect, it is different from a PRESENT WHEN clause at the 01-level which **does** prevent all other processing.

2. For example, you may use SUPPRESS PRINTING to **"restart"** your report after a breakdown. Simply write a USE BEFORE REPORTING section for every group and SUPPRESS each group until your program clears a flag. Your report will now be in the same internal state as when output really took place.

3. Each execution of a SUPPRESS PRINTING or MOVE 1 TO PRINT-SWITCH will prevent output **only on that single occasion**. Report writer will reset PRINT-SWITCH to zero after each excursion into your USE BEFORE REPORTING section.

4. In *USE BEFORE REPORTING* there are further examples of SUPPRESS PRINTING.

## 4.5.4 Compatibility

Apart from the *ANS-85* **GLOBAL** phrase, OS/VS and DOS/VS COBOL, and new Report Writer agree in their formats for this statement, but new Report Writer allows a USE BEFORE REPORTING section to be coded for a DETAIL group.

## 4.6 TERMINATE statement

The TERMINATE must be the **last** report writer statement to be executed for each report.

### 4.6.1

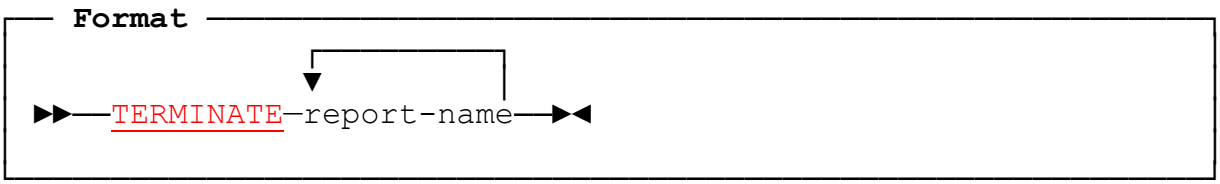


### 4.6.2 TERMINATE Statement: Coding Rules

1. Each *report-name* must be the name of a report in the current program, or that of a **GLOBAL** report defined in a containing program. (The *report-name* appears immediately after the *RD* level-indicator and also in the REPORT clause in the corresponding FD.)

2. **TERMINATE** must **not** appear in a USE BEFORE REPORTING directive *Declarative*.

### 4.6.3 TERMINATE Statement: Operation

1. A **TERMINATE** must be executed for every report that has been INITIATEd before the final close-down of the program.

2. The TERMINATE statement clears any **pending REPEATED groups** or *Page Buffer* contents. It also outputs any final **CONTROL FOOTING**, **PAGE FOOTING** and **REPORT FOOTING** groups that may be required at the end of the report. It then returns the report to an "*uninitiated*" state. **PAGE-COUNTER** and **LINE-COUNTER** will contain the final values they attained at the end of the report, but total fields will be zero (except under erroneous circumstances - see the end of 3.23.4 3 c above).

3. A separate, subsequent **CLOSE** should be executed for the associated report file. TERMINATE does **not** CLOSE the file.

4. If a TERMINATE is executed without **any** GENERATE statements being executed for the report since the INITIATE was executed, **no** output at all is produced. If you wish to ensure that at least the REPORT HEADING and REPORT FOOTING groups appear, you should in this case GENERATE a **blank DETAIL group** before the TERMINATE.

5. A report may be TERMINATEd and then INITIATEd again any number of times without closing the report file. The new INITIATE causes **PAGE-COUNTER** to return to **1** and, if the report has a PAGE LIMIT clause, will re-commence the report on a fresh page.

### 4.6.4 TERMINATE Processing Cycle

1. The following is a more thorough description of each stage in the execution of a TERMINATE statement:

2. If your report is **DUPLICATED** and *REPORT-NUMBER* is zero, the actions that follow are performed for each duplicate report.

3. If at least one **GENERATE** has been performed (indicated by the *control break indicator* being non-negative), the value of each *control-id* is temporarily altered to the value it had when the last GENERATE was executed, whilst each **CONTROL FOOTING** group is produced, from lowest to highest.

4. If any **REPEATED** groups are present, any buffered groups are output and the REPEATED buffer is flushed. Also, if the *Page Buffer* contains any data, this is output.

5. If a **PAGE FOOTING** group is present, it is produced.

6. If a **REPORT FOOTING** group is present, it is produced.

7. If your report is associated with an *Independent Report File Handler*, the file handler is invoked with an action code of 8. (If your report is *DUPLICATED*, this will only take place for reports that have been *INITIATEd*.)

8. The *current vertical position* location is set to -1 to indicate "report not initiated".

9. If any *total fields* are still non-zero, indicating that they have not all been output, an error diagnostic 15 is signalled.

10. If normal batch printing is in effect, a check is made of the error diagnostic flag and an appropriate run time error message is logged if necessary.

### 4.6.5 Compatibility

1. The coding rules for TERMINATE are identical for *OS/VS COBOL* and *DOS/VS COBOL* Report Writer and new Report Writer. The TERMINATE statement may perform more actions because of the additional functions provided by new Report Writer.

2. Access to a *GLOBAL* report is not available with OS/VS or DOS/VS COBOL.

## 4.7 USE BEFORE REPORTING directive

The USE BEFORE REPORTING directive causes a **SECTION** in the DECLARATIVES of your **PROCEDURE DIVISION** to be performed automatically just before a selected specified report group is produced.

### 4.7.1

**Format**

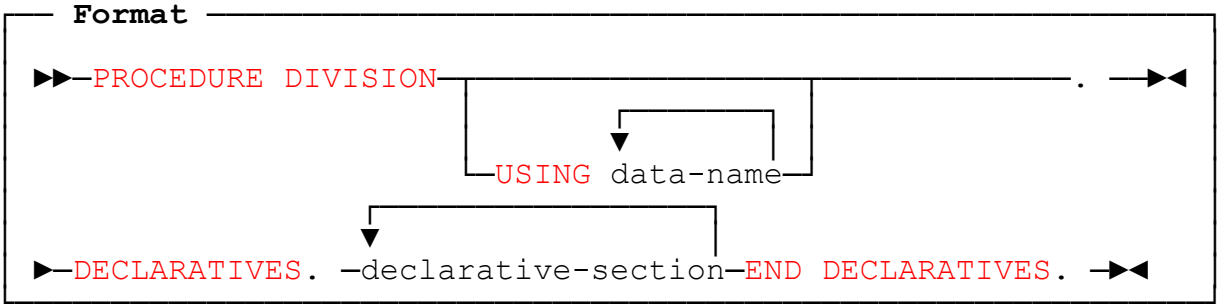


**where** *declarative-section* is defined as:

**Format**

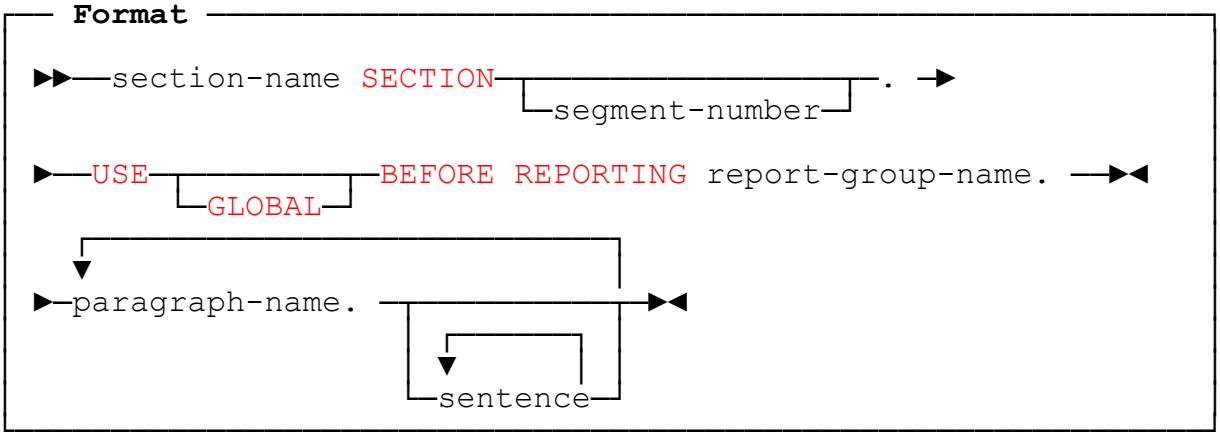


### 4.7.2 USE BEFORE REPORTING Directive: Coding Rules

1. The format above shows the **PROCEDURE DIVISION** and **DECLARATIVES** headers for the sake of completeness. They are used not just by report writer, and your program might already have Declarative sections for some other purpose. It is the distinctive format of the **USE BEFORE REPORTING** directive that tells report writer that the section is part of its responsibility. If you also have other Declarative sections, they may be intermixed with your USE BEFORE REPORTING sections in any order.

2. In order to code a USE BEFORE REPORTING section, you must ensure that the corresponding group has an 01-level data-name, so that you can refer to it as the *report-group-name*.

3. Your USE BEFORE REPORTING section may also PERFORM **other sections**. These are normally additional sections within the DECLARATIVES portion (as required by all ANS Standards). For this purpose, you may code additional sections within DECLARATIVES that have no USE statement. *Report writer* also allows your USE BEFORE REPORTING section to PERFORM sections in your mainline PROCEDURE DIVISION.

   The example that follows shows how you may code **one** section to be performed when one of **two** report groups is about to be produced:

```
01  BRANCH-HDDR   TYPE CH FOR BRANCH-CODE.
    ...
01  DEPT-HDDR    TYPE CH FOR DEPT-CODE.
    ...
PROCEDURE DIVISION.
DECLARATIVES.
CHANGE-BRANCH SECTION.
    USE BEFORE REPORTING BRANCH-HDDR.
CHB-000.
    PERFORM CHANGE-BRANCH-DEPT.
CHANGE-DEPT SECTION.
    USE BEFORE REPORTING DEPT-HDDR.
CHD-000.
    PERFORM CHANGE-BRANCH-DEPT.
CHANGE-BRANCH-DEPT SECTION.
CBD-000.
    ... (common code) ...
END DECLARATIVES.
```

4. Your USE BEFORE REPORTING section must **not** contain any **INITIATE**, **GENERATE**, or **TERMINATE** statements. Neither may any of the sections it may perform.

5. If you specify **GLOBAL**, the named report group must exist either in the current program or in a contained program.

### 4.7.3 USE BEFORE REPORTING Directive: Operation

1. If any of your report groups has a USE BEFORE REPORTING section, report writer will implicitly *PERFORM* the section during the processing of the group. Assuming that your report has every possible feature, the section will be implicitly performed:

   **After** the testing of control breaks and the production of any **CONTROL FOOTING** and **CONTROL HEADING** groups (if your group is a DETAIL);

   **After** the computation of your group's **cross-foot totals** (if any), so your USE BEFORE REPORTING section can reference them;

   If **OSVS** is in effect, **after** the **rolling forward** into your totals and **subtotalling** associated with your group;

If **NOOSVS** is in effect, **before** the **rolling forward** into your totals and **subtotalling** associated with your group, so your USE BEFORE REPORTING section can alter values that are due to be added into other groups' totals;

**Before** the moving of any **CODE** identifier, so your USE BEFORE REPORTING section can change the originating identifier;

**Before** the **page-fit test** and the production of any PAGE FOOTING and PAGE HEADING groups (if your group is a body group), so you may alter the originating fields due to be moved into them, or suppress them along with the body group itself.

**Before** any of the **SOURCE**, **SUM**, or **FUNCTION** fields are set up in the lines of your group, so you may change any of the originating fields due to be displayed in your group.

2. You may include the a SUPPRESS PRINTING statement or *MOVE 1 TO PRINT-SWITCH* in a USE BEFORE REPORTING Declarative, in order to prevent output for the group at that instant (see 4.5).

3. USE BEFORE REPORTING sections were used a great deal in the *ANS-68* and *ANS-74* COBOL report writer. So you may possess migrated programs that contain cases of their use. With *report writer* much of their functions are now performed by the PRESENT WHEN and PRESENT AFTER clauses. However, they can still be of considerable use. For example:

   a. You could use your Declarative section to *WRITE* additional records to another file, using the automatic control break processing to "drive" the rest of your program.

   b. You might use the USE BEFORE REPORTING section for a **CONTROL HEADING** group to *READ* an additional record at the start of each new CONTROL value, or fetch it from your *database*.

   c. You might need to suppress the printing of certain **totals** without preventing them from being reset to zero. (The PRESENT clause will prevent the resetting of a total field if it was not output.)

   d. You might want to force a CONTROL HEADING group to start on a new page under certain complex circumstances. Your USE BEFORE REPORTING section would then force page advance processing thus:

      IF *complex-condition*

         MOVE last-detail-value TO LINE-COUNTER.

   e. You might want to search a table for a corresponding text field at the start of each **CONTROL HEADING** group, and move it to a *WORKING-STORAGE* field that is the operand of a SOURCE in a PAGE HEADING or the CONTROL HEADING itself. (If your group is a DETAIL, it will be clearer to do this in the main-line program.)

f. There may be an item associated with a control which is not itself a control (such as a STATE-NAME logically associated with a STATE-NO control) which you will want to output **during CONTROL FOOTING time**. Since the item is not a control you will not automatically obtain the *before-the-break* value. You could code a Declarative section for the corresponding CONTROL HEADING group. This would save the current value of the field in a WORKING-STORAGE location which is then used instead of the input item in all SOURCE clauses in PAGE HEADING, PAGE FOOTING and CONTROL FOOTING groups.

If you have no CONTROL HEADING group, you may code one as a "*dummy*" (see 3.2 *Coding Report Group Descriptions*) with no LINE clauses, in order to take advantage of report writer's automatic control break checking, as suggested in the following example:

```
RD  ...              CONTROL IS IN-STATE-NO.
01  NEW-STATE       CH FOR IN-STATE-NO.
01  CF FOR IN-STATE-NO.
    ...
    05  COL ...     SOURCE IS WS-STATE-NAME.
01  PH.
    ...
    05  COL ...     SOURCE IS WS-STATE-NAME.
DECLARATIVES.
SAVE-CURRENT-STATE SECTION.
    USE BEFORE REPORTING NEW-STATE.
SAVE-000.
    MOVE IN-STATE-NAME TO WS-STATE-NAME.
END DECLARATIVES.
```

g. You may find it desirable to suppress printing of a minor CONTROL FOOTING if only **one** DETAIL is printed above it, since a "total" of a **single** value will seem out of place. Here is one way to do it:

```
01  DETAIL-ENTRY  DETAIL.
  03  LINE + 1.
    05  ... .
  ...
01  MINOR-CF      CONTROL FOOTING FOR STATE-NO.
  03  LINE + 2.
    05  ... .
    05  R-DETAIL-COUNT  PIC 999  COUNT OF DETAIL-ENTRY.
    ...
DECLARATIVES.
ZAP-CF-SECTION SECTION.
    USE BEFORE REPORTING MINOR-CF.
ZAP-CF-000.
    IF   R-DETAIL-COUNT = 1 SUPPRESS PRINTING.
END DECLARATIVES.
```

Do **not** instead code an **ABSENT WHEN** clause at the *01*-level of the CONTROL FOOTING group, as this would have the undesirable side-effect of preventing the resetting and rolling forward of any SUM fields that you might have defined in the CONTROL FOOTING group.

4. If you specify **GLOBAL**, your Declarative section will apply both to the current program, if it contains a report group of that name, and also to any contained program that has a report group of that name but no USE BEFORE REPORTING section of its own for that name. If a contained program also has a USE GLOBAL BEFORE REPORTING section for the same report-group-name, this overrides the effect of original section until the end of the contained program.

### 4.7.4 Compatibility

Apart from the *ANS-85* **GLOBAL** phrase, OS/VS and DOS/VS COBOL, and new Report Writer agree in their formats for this statement, but new Report Writer allows a USE BEFORE REPORTING section to be coded for a DETAIL group.

# 5

# Special Topics

This part treats some more advanced or specialized topics. The production of **multiple reports**, and the development of **user-written** extensions ( ***functions*** and ***file handlers***) are also described.

# 5.1 Multiple Reports

***COBOL Report Writer*** provides a means for producing either **one** physical file from **several** reports, or **several** physical files from **one** report description. The following sections describe each case:

## 5.1.1 Several Reports to One Physical File

This is indicated when you write the clause

```
REPORTS ARE report-name-1 report-name-2 ...
```

in the FD entry for the report file. The different reports may be written either **successively**, **alternately**, or **concurrently** to the file.

## 5.1.2 Successive Reports

This describes the case when each successive report is processed through from **INITIATE** to the final **TERMINATE** and is then not accessed again:

```
INITIATE report-name-1
GENERATE report groups in report-name-1
...
TERMINATE report-name-1
INITIATE report-name-2
GENERATE report groups in report-name-2
...
TERMINATE report-name-2
```

This method is free of complications and has useful applications. One example is the case where a report has a ***front section*** or a ***trailing section***, too complex too describe as a **REPORT HEADING** or **REPORT FOOTING**:

```
very complex "report heading"
...
...
```

```
< Instead of automatically using a
< REPORT HEADING, remember that this
< could be a report in its own right.
```

```
body of report
...
...
```

```
very complex "report footing"
...
```

```
< This might also be a
< separate "report".
```

The "Report Heading" might have several parts, and the "Report Footing" might have many complex parts, totals, etc. You might instinctively try to describe this complex

layout using a single ***RD***, because it has been designed as a single report. Remembering that a ***"report file"*** may be composed of several ***"logical reports"***, you now re-code the layout using three RDs:

```
FD  print-file ...
    REPORTS ARE HEADING-REPORT, MAIN-REPORT, TRAILING-REPORT.
    ...
RD  HEADING-REPORT
    ...
RD  MAIN-REPORT
    ...
RD  TRAILING-REPORT
            ...
```

and code the ***INITIATE***, all the ***GENERATEs*** and the ***TERMINATE*** for each report in tandem. Assuming that each RD has a **PAGE** clause, each report will begin on a new page, as required.

This example assumes that you have **no page numbering** in the "Report Heading" or "Report Footing", and that you start with a page number of **one** in the main report. If you do require page numbering throughout, remember that each report has its own separate **PAGE-COUNTER**. Assuming that the page numbers are to run in sequence throughout the report, you must carry forward the PAGE-COUNTER after each TERMINATE, as follows:

```
PROCEDURE DIVISION.
    ...
    INITIATE HEADING-REPORT
    GENERATE heading-groups ...
    TERMINATE HEADING-REPORT
*
    INITIATE MAIN-REPORT
    ADD 1 PAGE-COUNTER IN HEADING-REPORT GIVING PAGE-COUNTER IN MAIN-REPORT
    (process main report)
    TERMINATE MAIN-REPORT
*
    INITIATE TRAILING-REPORT
    ADD 1 PAGE-COUNTER IN MAIN-REPORT GIVING PAGE-COUNTER IN TRAILING-REPORT
    GENERATE trailing-groups ...
    TERMINATE TRAILING-REPORT
```

### 5.1.3 Alternating-Page-Format Reports

You may encounter the case where a report consists of two or more **alternating page formats**, such as ***details of area A...summary page for area A details of area B...summary page for area B...***, where each page format begins on a fresh page and has different PAGE HEADING, PAGE FOOTING and body groups from the others:

```
Page Heading for detailed report
AREA A

                DETAILED REPORT

                    ...
                    ...
```

< Detailed report headings are
< a problem.

```
Page Heading for summary report
SUMMARY FOR AREA A

                SUMMARY REPORT
```

< You cannot code this page as a
< CONTROL FOOTING because the page
< headings are completely different.

```
Page Heading for detailed report
AREA B

                DETAILED REPORT

                    ...
                    ...
```

< Here the page headings return
< to the first layout.

```
Page Heading for summary report
SUMMARY FOR AREA A

                SUMMARY REPORT
```

When approaching this problem, keep in mind the points made under ***Successive Reports*** above. This time, we keep **both reports initiated**. (If not, the page numbering will return to 1 after each **INITIATE**, and there will be problems if, say, we want to produce ***grand totals*** at the end of the reports.) The following is one possible solution.

```
FD  print-file ...
    REPORTS ARE DETAILED-REPORT, SUMMARY-REPORT.
    ...
RD  DETAILED-REPORT
    ...
RD  SUMMARY-REPORT
    ...
```

```
*
 PROCEDURE DIVISION.
     ...
     INITIATE DETAILED-REPORT, SUMMARY-REPORT
     obtain first input record
     PERFORM UNTIL end-of-file
          GENERATE detailed-groups ...
          IF   change in AREA code
               MOVE PAGE-COUNTER IN DETAILED-REPORT
                 TO PAGE-COUNTER IN SUMMARY-REPORT
               GENERATE summary-groups
               MOVE PAGE-COUNTER IN SUMMARY-REPORT
                 TO PAGE-COUNTER IN DETAILED-REPORT
          END-IF
          obtain next input-record
     END-PERFORM
     TERMINATE DETAILED-REPORT, SUMMARY-REPORT
```

(An alternative solution is to use an expression made up from both PAGE-COUNTERs, for example:

```
        05  COL 100   "PAGE:".
        05  COL + 2   PAGE-COUNTER IN DETAILED-REPORT +
            PAGE-COUNTER IN SUMMARY-REPORT - 1.)
```

Because you are not doing a **TERMINATE** and **INITIATE** on each occasion that you "switch reports", they will not necessarily always resume on a fresh page. Consider each report separately and decide how you would make it resume on a fresh page if the other report were not there. For example, you might begin after each "switch" with a **GENERATE** of a **DETAIL** group with a low absolute LINE number; or you might use the **NEXT GROUP NEXT PAGE** clause in a ***dummy*** CONTROL HEADING; or you might simply code **MOVE footing-integer TO LINE-COUNTER IN next-report-name** before resuming.

### 5.1.4 Concurrent Reports

There are two quite unconnected cases to discuss here:

a. **One report built up from several alternating RD's.**

Here, you ***GENERATE*** output via two or more ***RDs*** associated with the same report file without necessarily waiting for a page advance before switching from one report to another. It can be difficult to use this method, because each report keeps its own **LINE-COUNTER** and control break information. Each report will therefore act as though it alone had control of the page format. Although no serious breakdown is likely at run time, you will have to take special steps to ensure that pages terminate at the correct point. To do this, you will need to ***MOVE*** one **LINE-COUNTER** to another in much the same way that the ***PAGE-COUNTERs*** are dovetailed in the section on ***"Successive Reports"*** above. If you specify the same ***control-ids*** in each report, remember that each possible control break will occur in each report separately, when it is ***GENERATEd***.

b. **Distinct reports spooled to the same file.**

Here, **several** reports are written to the **same** file but are distinguished by means of the CODE (see 2.5 *CODE clause*). This technique was commonly used in the past when print data was ***spooled*** onto tape or disk. Several reports could be written to the same spool file by marking the print records of each report with an identifying character, characters, or ***identifier*** of any length. De-spooling software then passed through the spool file, each time selecting only those print records beginning with a certain identifying character. (It was possible to sort the records, but this is usually much less efficient.) As example, you might have had two reports:

```
 FD  PRINT-FILE ...
     REPORTS ARE REPORT-A REPORT-B.
 ...
 RD  REPORT-A ...
     CODE IS "A" ...
*or: CODE IS mnemonic-name
*and put in SPECIAL-NAMES: "A" IS mnemonic-name
 01  ...
     ...
 RD  REPORT-B ...
     CODE IS "B" ...
 01  ...
     ...
```

The reports were both written to the same file, but you there was no problem in separating them as the reports eventually appeared as separate outputs, thanks to their distinguishing codes. A utility to separate and print the physical reports is not provided as a part of the ***report writer*** software, and users who developed a utility program to handle the output produced by ***OS/VS*** and ***DOS/VS*** COBOL's built-in report writer with a CODE clause should use the same program to handle the output from ***report writer***.

### 5.1.5 Several Outputs From the Same RD

There are two cases to be reviewed for this topic:

a. **Identical copies of the same physical report.**

Following the ***ANS-74/85*** standards, ***report writer*** does not allow you to assign your report to more than one file. This is more restrictive than the ***ANS-68*** standard used in ***OS/VS and DOS/VS COBOL***, which allows up to **two** files. If you require two or more identical copies of the same physical report, you should try to achieve this through Operating System commands, or you should write an ***Independent Report File Handler*** (see 5.3 *Independent Report File Handlers*) that executes a ***WRITE*** for each of several files for each report line.

b. **Different reports with similar formats going to different files.**

In a program with several reports, you may find that two or more report layouts are **identical**, or nearly so, and you naturally want to avoid duplication of code. The **DUPLICATED** clause is designed for this purpose. The following diagram shows a case with three files.

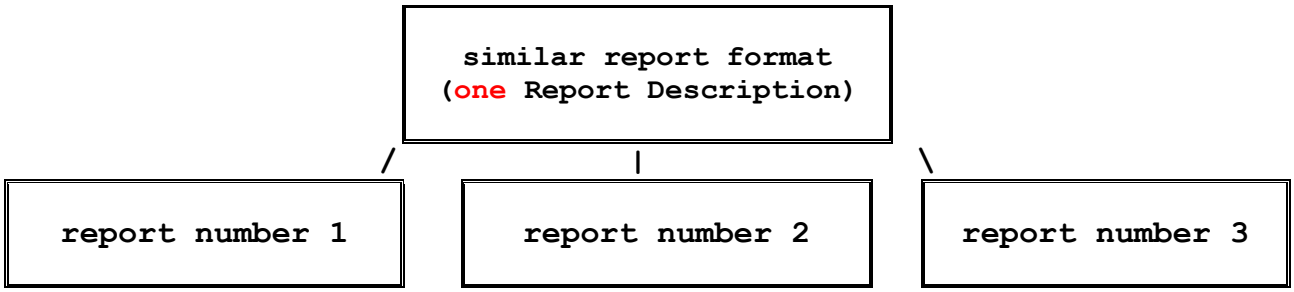


Although the **layouts** are similar, the **contents** of the reports may be quite different (as distinct from ***case a*** where all output is simply printed twice). The **DUPLICATED** clause (see 2.2 *Report Files*) sets up the given number of separate report control areas, each with its own ***PAGE-COUNTER***, ***LINE-COUNTER*** , totals, control break indicators, ***Page Buffer***, etc. They are distinguished by the value of the ***special register*** **REPORT-NUMBER** which is defined by report writer in every program that has a DUPLICATED clause. You may "switch" output to your selected report by storing a value from 1 to the maximum number of duplicates in REPORT-NUMBER. Output goes to only one of the reports at any given time. Although there are several separate physical files, only **one SELECT** clause and **one FD** entry are coded, and **one OPEN** and **CLOSE** is executed. Despite your own OPEN statement, a file is actually opened only when the report whose number is held in REPORT-NUMBER is first ***INITIATEd***.

If REPORT-NUMBER is **zero** when the **INITIATE** is executed, **all** the reports are ***INITIATEd***. The **CLOSE** operation (not the TERMINATEs) closes **all** the files that were opened. The value of REPORT-NUMBER is immaterial when you OPEN and CLOSE. You may **MOVE ZERO to REPORT-NUMBER** and do a single **TERMINATE**. This will TERMINATE all the reports that were INITIATEd. If REPORT-NUMBER is not zero when a TERMINATE is executed, only the corresponding report is terminated.

The report layouts need not be identical in all respects. You may vary the entries "present" from one report to the next by using the **PRESENT WHEN** clause, and you may vary the contents by the same means or by using SOURCE identifiers **subscripted** by REPORT-NUMBER. The DETAIL groups may even be different for each of the reports, since you can of course choose at any time which DETAIL groups to GENERATE. Therefore the **DUPLICATED** clause may still save you coding time even if there are notable differences in the layouts of the report groups.

At run time, report writer will **vary** the for each of your multiple print files by appending to it the two digits **01** (for the first file) up to **nn** for the last file, where nn is the integer in your DUPLICATED clause. If you specify a ***DDname*** of more than six characters, characters 7 and 8 of your ***DDname*** are overwritten. For example:

```
SELECT FILEA ASSIGN TO LST  DUPLICATED 3 TIMES
```

expects your DDnames to be LST01, LST02 and LST03, and

```
SELECT...ASSIGN TO LISTINGF DUPLICATED 16 TIMES
```

expects your DDnames to be LISTIN01 through LISTIN16.

The following sample of coding shows how these techniques are used:

```
 FILE-CONTROL.
     SELECT REPORT-FILE ASSIGN TO PRINTF
     DUPLICATED 3 TIMES.
 ...
 FD  REPORT-FILE
     ...
     REPORT IS STOCK-REPORT.
 ...
 REPORT SECTION.
 RD  STOCK-REPORT ...  .
 01  STOCK-LINES  TYPE DE.
   03  LINE + 2.
     ...
*The following is a subheading that is different in each report:
     05 COL 120 PIC X(20) SOURCE WS-DESCRIPTION (REPORT-NUMBER).
*The following line is not generated in report #1:
   03  LINE       ABSENT WHEN REPORT-NUMBER = 1.
     ...
 PROCEDURE DIVISION.
     ...
*Report file is opened only once
*even though it represents 3 potential files
     OPEN OUTPUT REPORT-FILE     *> intercepted by report writer
     ...
*If report #1 is required during this run:
     MOVE 1 TO REPORT-NUMBER
     INITIATE STOCK-REPORT
     ...
*and, in general, if report #n is required:
     MOVE n TO REPORT-NUMBER
     INITIATE STOCK-REPORT
     ...
*When output is sent to report #1, for example:
     MOVE 1 TO REPORT-NUMBER
     GENERATE STOCK-LINES
     ...
*and, in general, when output is sent to report #n:
     MOVE n TO REPORT-NUMBER
     GENERATE STOCK-LINES
     ...
*to terminate all of the 3 reports that may have been initiated:
     MOVE 0 TO REPORT-NUMBER
     TERMINATE STOCK-REPORT
     ...
*or, to terminate just report #1:
     MOVE 1 TO REPORT-NUMBER
     TERMINATE STOCK-REPORT
     ...
     CLOSE REPORT-FILE.
```

If you refer to ***LINE-COUNTER***, ***PAGE-COUNTER***, a total field, or any of the other ***special registers*** within the ***Report Control Area***, the actual location accessed will be the one belonging to the report for which the most **recent** INITIATE, GENERATE, or TERMINATE was performed. For example, if you wish to reset PAGE-COUNTER in each of your reports in the multiple set, you should define a ***dummy*** DETAIL group (one having no LINEs) and code the following:

```
MOVE 1 TO REPORT-NUMBER
GENERATE DUMMY-GROUP          *>needed to make Report #1 current
MOVE 0 TO PAGE-COUNTER
MOVE 2 TO REPORT-NUMBER
GENERATE DUMMY-GROUP
... etc. ...
```

If you use a procedural statement, such as a ***MOVE***, to store a value directly into a named field in one of your REPORT SECTION lines, the new contents will take effect for all the reports of the multiple set, because the report lines produced by report writer are shared by each of them.

# 5.2 Developing User-Written Functions

## 5.2.1 The Need for Functions

The **FUNCTION** clause, which is described from the user's point of view under 3.7 *FUNCTION clause*, allows you to develop your own ***function routines*** as well as to use certain built-in functions, such as **DAY**, **MDATE**, and **TIME**. A user-written function allows you to display report data in a way peculiar to your installation.

***User-written*** functions are especially effective when needed in many separate programs, as they provide a standard way of displaying certain codes or other items of information peculiar to the user site. Indeed a commitment to ***"think functionally"*** may greatly improve efficiency throughout a programming department. To convince yourself of this, consider the following scenario, **before** the introduction of functions:

Many report programs require the programmer to code a ***table of descriptions*** or names directly into the ***Working-Storage*** of the program. Perhaps at first only a few report programs of this type are written, so that, even when some extra codes are added to the table and all those programs have to be re-compiled, no one objects too strongly.

Suddenly a large number of new programs are written that require the same names. Some programmers code the table from scratch; others prefer to take a copy from a working program. Business conditions then change and many new codes are added to the table. Dozens of programs have to be changed. Any change requires retesting of whole suites of programs. Each program has its own particular way of encoding the table, so an amendment becomes a major undertaking. At the end of it, no one is absolutely sure that all the programs affected have been found and amended.

When the next major change becomes necessary, some one decides that from now on all the codes will be held in a static ***"table file"***. New programs are guaranteed to be independent of the codes and names, but there is a penalty to be paid in each program, because of all the extra steps needed to ***OPEN***, ***READ*** and ***CLOSE*** the file in the program. Later, there might be a general change from traditional files to a ***database, so all the programs have to be amended again.***

Through the use of ***functions*** from the outset, programs can be made independent of all these changes. The program will be shorter and the programmer need not worry about how the report field is created. Control over specification and change becomes more assured.

### 5.2.2 How To Write a Function Routine

As designer of a ***function*** routine, you have a free hand to transform the data in any desired way, provided that the print data that results fits within the limits of the print field described by the programmer in the associated ***PICTURE*** clause.

Most ***function routines*** are COBOL subprograms with a standard LINKAGE SECTION, but they may also be written in any programming language that can be CALLed by COBOL. The use of COBOL normally prevents the number of parameters passed to the FUNCTION from being ***variable*** (a minor benefit). Since they are "normal" programs, ***function routines*** may use any files or databases that are available to other programs, may CALL other subprograms, and may store intermediate results in their own Working-Storage.

The number of relevant characters returned in the output (report) field may **vary**, thus enabling the same function routine to handle different sizes and formats, for example **"*date*"** formats with different arrangements of ***day***, ***month***, and ***year***. The size and format of the user-coded parameters (if any) are usually prescribed by the ***function routine*** and cannot vary, unless the designer decides to specify an additional parameter to indicate which of a choice of formats the input is in. All parameters are passed "by reference" so, although they normally pass data only **into** the ***function routine***, they may also be used to pass updated data **back** to the user program.

The ***function routine*** is used in the program via the FUNCTION clause, and the programmer need not be aware of the precise mode of operation of the ***function routine***. The description of the built-in functions is also given in 3.7 *FUNCTION clause*. User-written functions may be similarly specified and added to this publication in an appropriate place.

The program name of the ***function routine*** should be **Rnxxxxxx**, where **xxxxxx** is the mnemonic name of the function of no more than 6 alphanumeric characters and ***n*** is the number of parameters to the function. For example, if the function is called **COUNTY** and takes one parameter, you must write a function module with the program-id: **R1COUNTY** otherwise. If the same function has a ***variable*** number of parameters, separate function routines must be written (although they may all call a common subordinate routine).

The parameters to the ***function routine*** are as follows:

```
Parameter 1:      Function Control Area, consisting of:
    2 bytes binary:   number of user-coded parameters present in FUNCTION
                      clause, i.e. excluding internal parameters 1 and 2;
    2 bytes binary:   total size of field, in bytes, or, if field is
                      edited, its equivalent de-edited size;
    2 bytes binary:   size in bytes of parameter #1 of FUNCTION, if any
    2 bytes binary:   size in bytes of parameter #2 of FUNCTION, etc.

Parameter 2:      report field; if edited, de-edited intermediate field;

Parameters 3,4... (optional) parameters as defined in FUNCTION clause.
```

### 5.2.3 Sample COBOL Function Routine

```
 IDENTIFICATION DIVISION.
 PROGRAM-ID.  R1DEPOT.
*
*COBOL Report Writer user function
*Converts internal depot code 'L', 'B', or 'N'
*to full name for printing in report
*Available report field sizes:
*  4 = short form ('LNDN', 'BHAM', 'NCSL', ETC.)
* 12 = long form ('LONDON', 'BIRMINGHAM', 'NEWCASTLE' ETC.)
*
*To use, write: FUNC DEPOT (DEPOT-CODE) instead of SOURCE...
*
*This function may be converted later to hold depot names in a
*file or database table without impact on the programs.
*
 ENVIRONMENT DIVISION.
 DATA DIVISION.
*
 WORKING-STORAGE SECTION.
 01  WS-FIELDS.
*table of short names
   03  SHORT-NAME-TAB        VALUE "LNDNBHAMNCSL????".
     05  SHORT-NAME          PIC X(4) OCCURS 4.
*table of long names
   03  LONG-NAME-TAB         VALUE
       "LONDON      BIRMINGHAM  NEWCASTLE   UNKNOWN     ".
     05  LONG-NAME           PIC X(12) OCCURS 4.
   03  W-DEPOT-NUMBER        PIC S9(4) COMP.
   03  W-PARAM-ERR           PIC X.
*
 LINKAGE SECTION.
*Param (1): Function Control Area
 01  L-FUNC-CTL.
*No. of parameters to function:
   03  L-PARAM-CNT           PIC S9(4) COMP.
*Length of output field in bytes:
   03  L-OP-LEN              PIC S9(4) COMP.
*Length of parameter in bytes:
   03  L-PM1-LEN             PIC S9(4) COMP.
*
*Param (2): output area
 01  L-OP-FLD.
   03  L-OP-CH               PIC X   OCCURS 1 TO 12
                             DEPENDING ON L-OP-LEN.
*Param (3): input depot code
 01  L-DEPOT-CODE            PIC X.
*
```

```
 PROCEDURE DIVISION USING L-FUNC-CTL, L-OP-FLD, L-DEPOT-CODE.
 FUNCTION-ENTRY.
     PERFORM PARAMETER-CHECK
     IF   W-PARAM-ERR = "N"
          PERFORM CONVERT-CODE.
 FUNCTION-EXIT.
     EXIT PROGRAM.
*Routine to check parameters:
 PARAMETER-CHECK.
     MOVE "N" TO W-PARAM-ERR
*Check correct parameter specification
     IF   L-PARAM-CNT NOT = 1
     OR   L-PM1-LEN NOT = 1
          DISPLAY
          "R1DEPOT ERROR CRW-651: INVALID PARAMETERS"
          MOVE "Y" TO W-PARAM-ERR.
*Check report field is correct size
     IF   L-OP-LEN NOT = 4 AND NOT = 12
          DISPLAY
          "R1DEPOT ERROR CRW-652: INVALID REPORT FIELD SIZE"
          MOVE "Y" TO W-PARAM-ERR.
*Routine to convert depot code:
 CONVERT-CODE.
*Check input depot code, convert to integer 1-3, or 4 if unknown
     IF   L-DEPOT-CODE = "L"
          MOVE 1 TO W-DEPOT-NUMBER
     ELSE IF   L-DEPOT-CODE = "B"
               MOVE 2 TO W-DEPOT-NUMBER
          ELSE IF   L-DEPOT-CODE = "N"
                    MOVE 3 TO W-DEPOT-NUMBER
               ELSE MOVE 4 TO W-DEPOT-NUMBER.
     IF   L-OP-LEN = 4
          MOVE SHORT-NAME (W-DEPOT-NUMBER) TO L-OP-FLD
     ELSE MOVE LONG-NAME (W-DEPOT-NUMBER) TO L-OP-FLD.
```

# 5.3 Independent Report File Handlers

## 5.3.1 Introduction

An *Independent Report File Handler* (or *file handler*) is a separately-compiled program routine that takes over all the functions of the normal COBOL **OPEN-WRITE-CLOSE** protocol for a particular report. The source program, as written, is identical in all respects to a regular batch print program, except that the **SELECT...ASSIGN** clause for the file to which the report is directed carries the additional sub-clause **MODE IS...** (see 2.2 *Report Files*), and that there may also be a CODE clause (see 2.5) in the RD. (The MODE sub-clause can also be "forced" by default onto any report file does not have a MODE by an external option setting - see *Installation and Operation*.)

File handlers monitor the results of any i/o operations they perform and pass any error codes back in the **FILE STATUS** field in the usual way, or, if no FILE STATUS is specified, they display a suitable message and, if the error is irrecoverable, abort the run.

New Report Writer comes with some built-in file handlers and these are listed below. Any number of others may be written by users to similar standards. File handlers can be written in COBOL or another language.

## 5.3.2 Supplied File Handlers

The following list explains the function of each of the built-in file handlers and gives the MODE mnemonic you require to invoke each.

**MODE PRNT** ***Purpose:*** basic printing.

This file handler performs the same basic print functions as when no file handler is used at all. Unless you already specify a MODE clause, it will be used automatically when any of the following features is used:

- **PAGE BUFFER** clause in SELECT
- **DUPLICATED** clause in SELECT
- **STYLE** clause
- **UPON** option of INITIATE
- **CODE**s of ***unequal*** length for RDs of same file.

***Effect of CODE:*** Placed at start of print line, as in ANS standards. It is output **after** any carriage control characters.

**MODE NOPF** ***Purpose:*** basic printing without using page feeds.

This file handler fills each page entirely using line feeds.

***Effect of CODE:*** Placed in print line **after** the carriage control.

**MODE MODL** ***Purpose:*** for use in a modular system.

This file handler may be used by more than one separately compiled program in a run unit. Each program may thus write to the same report file. See listing below.

***Effect of CODE:*** Placed in print line **after** the carriage control.

| | |
|---|---|
| **MODE CHAN** | ***Purpose:*** make optimal use of any printer channels.<br>The channel positions are fed into the file handler at run time, as described in ***Installation and Operation***. The file handler automatically uses channel skips to get as near as possible to each target line. The RD does not change.<br>***Effect of CODE:*** Placed in print line **after** the carriage control. |
| **MODE DUPL**<br>*not VSE* | ***Purpose:*** emulate OS/VS and DOS/VS COBOL's ability to write to two files simultaneously.<br>The file handler performs the OPEN, WRITE, CLOSE as appropriate for each file in turn.<br>***Effect of CODE:*** Placed in print line **after** the carriage control. |

### 5.3.3 User-Written File Handlers

An ***Independent Report File Handler*** is not usually developed as part of one program, but **separately** so that it can be used by **all** the report programs in a project. Only a brief specification is normally required, similar to those in the table of built-in file handlers below. **Any** application will then be able to use the file handler.

The file handler has a fixed **LINKAGE SECTION**, and the areas and their various locations are given in COBOL format below. For use in a language other than COBOL, translate the data-names and PICTUREs as appropriate.

The program-name of the file handler is related to the name of the **MODE** mnemonic. Full details are given in ***Operation and Installation***.

### 5.3.4 Possible Uses of a File Handler

In this section we list some possible uses to which you might put a file handler.

1. **Using COBOL Report Writer for Non-Report Output**

Provided your program's "report lines" contain no ***COMPUTATIONAL*** entries, you might adapt your file handler to produce output which is not intended for printing but instead for passing on to another program. Then, if you decide to ignore all LINE numbers, so that each "line" is another record irrespective of the "line advance", your file handler would simple do a WRITE **without** ADVANCING.

2. **Output to Database**

Your program may be required to send its printed output to a ***database*** rather than in a sequential file.

3. **Private STYLEs**

If the printer has advanced features that require special programming, you can designate certain ***STYLEs*** as **PRIVATE**. The processing of such ***STYLEs*** is then left to your file handler. Full details are in ***Installation and Operation***.

4. **Output to Multiple Files**

Your file handler may write to several files **simultaneously**, as outlined above (see 5.1.5 *Several Outputs From the Same RD*) and under **MODE DUPL** above.

## 5.3.5 Using CODE

In a ***"batch"*** report, the **CODE** is a ***"literal"*** prefixed to every print line. However, with a file handler you can designate the CODE clause for the passing of any additional information from the program to the file handler. Normally this is to control the output, rather than for output as part of the data. For example, given the necessary hardware and software prerequisites, you might decide to develop a file handler, and use the CODE clause, as follows:

| **Your possible file handler**: | **Likely use of CODE**: |
|---|---|
| *Microfiche* output | **Key** for fiche indexing. |
| Remote transmission | *Identifier* for remote printer. |
| Spooled restart system | *Key*, *page number*, etc., for restart. |

The contents of the program's **CODE** operand appears in the file handler as the LINKAGE SECTION item **L-RCA-CODE-VAL**, as described later in this section.

## 5.3.6 Actions of an Independent Report File Handler

A file handler must perform certain mandatory housekeeping functions in order to execute correctly in combination with the report writer code. However, the method by which the report data is physically output is left entirely to the file handler.

If the file handler may be required to service more than one report file or ***INITIATEd*** report simultaneously, or be required to be usable by more than one program simultaneously, it should store its intermediate results in the ***File Control Area*** or ***Report Control Area***, where certain locations have been reserved for discretionary use by the file handler.

The following are the mandatory housekeeping actions that must be performed by every file handler. The standard locations referred to are described later in this section.

1. If the location **L-FCA-ACT-IND** is anything other than "0" or "9", **"OPEN"** the report "file". The file handler may interpret the OPEN function and the nature of the "file" in any way it wishes. The value of **L-FCA-ACT-IND** indicates the type of OPEN required (OUTPUT, EXTEND, or other).
2. If the location **L-RCA-ACT-IND** is "6", **"INITIATE"** the report. The file handler may perform the INITIATE action in any way it wishes.
3. If there is data to output, indicated by the field L-PRC-BYTE-CNT being non-zero, **"print"** the data. The exact nature of the "printing" activity is left entirely to the file handler and may differ widely from a "batch" WRITE statement. The following locations will be needed to accomplish this:

   **L-RCA-VERT-POSN** contains the current vertical position or zero. If it is zero the file handler should execute a ***"form feed"***. This action should be omitted if **L-RCA-PAGE-LIM** is zero, indicating that the report is not divided into pages.

**L-FCA-SUPP-PFD**, if set to **1**, indicates that the program has a **FIRST PAGE NO ADVANCING** clause in the SELECT...ASSIGN. If so, the "form feed" is not done and instead the current position is assumed to be "line 1". It is cleared automatically by the control routine.

**L-RCA-LINE-CNTR** contains the target vertical position. By subtracting L-RCA-VERT-POSN from this, you obtain the distance to be advanced.

4. If the location **L-RCA-ACT-IND** is "8", **"TERMINATE"** the report. The file handler may perform the TERMINATE action in any way it wishes.

5. If the location **L-FCA-ACT-IND** is "9", **"CLOSE"** the report "file". The file handler may interpret the CLOSE function in any way it wishes.

By convention, there will never be more than **one** action from the possibilities OPEN, INITIATE, "print", TERMINATE, and CLOSE on any entry.

### 5.3.7 File Handler LINKAGE Areas

All the information required by the file handler is passed to it via optional user parameters and three standard LINKAGE areas, of which source copies are provided with this product.

1. Optional Leading Parameters: User-Defined Parameters

   There may be any number of parameters at the start of the LINKAGE SECTION pre-determined by the user and specified through the **USING** phrase of the MODE clause. See 2.2 *Report Files* for a description of this phrase.

2. Parameter 1: File Control Area

   The ***File Control Area*** contains information relating to the current report file. A File Control Area is set up for each report file that has a MODE clause.

```
 01  L-FCA-CNTRL-AREA.
*Maximum length in bytes of CODEs for this file.
*= 0 if CODE clause is not present for any reports in file.
   03  L-FCA-CODE-LEN        PIC S9(4) COMP.
*Maximum record length in bytes for File.
   03  L-FCA-REC-LEN         PIC S9(4) COMP.
*Action indicator byte.
*Action performed is open to interpretation by the designer.
*"0" = no action against file
*"1" = file to be opened output
*"2" = file to be opened extend
*"5" = file to be opened in irregular manner
*"9" = file to be closed
   03  L-FCA-ACT-IND         PIC X.
```

```
*File status indicator.
*Initial value = low-values (hex '00')
*"0" = file not opened
*"1" = file opened output
*"2" = file opened extend
*"5" = file opened in irregular manner
*"9" = file closed
   03  L-FCA-STAT-IND        PIC X.

*Count of reports initiated for this file.
*Incremented by 1 on INITIATE, decremented by 1 on TERMINATE;
*initially zero, must never become negative;
*used to warn on CLOSE if some report(s) still initiated
   03  L-FCA-REPS-INT        PIC S9(4) COMP.

*MODE mnemonic name:
*up to 4 characters (padded with spaces) from the MODE clause
   03  L-FCA-MODE-MNEM       PIC X(4).

*File Status:
*If L-FCA-FS-IND (below) = "1", file handler control routine will
*always pass back any file status here without abandoning the run;
*Otherwise, file handler control routine will abandon the run with
*an error message if a serious error is indicated in File Status.
   03  L-FCA-STATUS          PIC XX.

*File Status indicator: set if SELECT has a FILE STATUS clause.
   03  L-FCA-FS-IND          PIC X.
*Unassigned:
   03  FILLER                PIC X.

*Locations reserved for communication between file handler
*and report writer:
*integer of DUPLICATED clause if present; zero if no such clause
   03  L-FCA-DUP-FACT        PIC S9(4) COMP.

*Recording mode = "F", "V", "U", "S" or space if not specified
*taken from RECORDING MODE clause of the FD;
*may be taken into account or ignored by the file handler
*(report record is always variable-length; (see 2.2.3))
   03  L-FCA-REC-MODE        PIC X.

*Indicator set = "1" if PAGE BUFFER clause present:
   03  L-FCA-PBUF-IND        PIC X.

*First four characters of file name:
   03  L-FCA-FILE-PFIX       PIC X(4).

*Locations reserved for use by file-handler:
*Address of block of DUPLICATED FCA's, if applicable
   03  L-FCA-DUP-ADR         PIC X(4).
*General-purpose location used as by file handler
   03  L-FCA-GEN-LOCN        PIC S9(4) COMP.
```

```
*Suppress page feed indicator:
*Set = "1" if next page feed (always the first since OPEN) is
*to be ignored.
   03  L-FCA-SUPP-PFD        PIC X.
*Data-written indicator:
*Set = "1" if something has been written to the file
   03  L-FCA-WRITE-IND       PIC X.
*Unassigned:
   03  FILLER                PIC X(4).
*Reserved for general use by File Handler:
   03  L-FCA-WORK-AREA       PIC X(20).

*DDname from SELECT...ASSIGN statement:
*May be altered by user program by storing value in
*field DDNAME in File Control Area
   03  L-FCA-DDNAME          PIC X(8).
*Alternative details of file name:
   03  L-FCA-FN-BLK REDEFINES L-FCA-DDNAME.
*Length in bytes of file-name
     05  L-FCA-FN-LEN        PIC S9(4) COMP.
*Binary zero:
     05  L-FCA-FN-SLACK      PIC X.
     05  FILLER              PIC X.
*Address of file-name
     05  L-FCA-FN-ADR        PIC X(4).

*End of File Control Area
```

3. **Parameter 2: Report Control Area**

The *Report Control Area* is set up by the Precompiler for each report that is directed to a file that has a **MODE** clause. In the user program, the Report Control Area is identified by the report-name.

```
 01  L-RCA-CNTRL-AREA.

*PAGE-COUNTER, referred to in program as
*PAGE-COUNTER [IN report-name]:
   03  L-RCA-PAGE-CNTR       PIC S9(9) COMP.

*LINE-COUNTER, referred to in program as
*LINE-COUNTER [IN report-name]
*Shows the desired position for this report line:
   03  L-RCA-LINE-CNTR       PIC S9(9) COMP.

*Vertical position pointer.
*Shows the actual current position vertically on the page.
*diff. between this field and LINE-COUNTER gives desired advance;
*If this location is zero, a form feed is required first.
   03  L-RCA-VERT-POSN       PIC S9(9) COMP.

*Line byte count override;
*Used internally only.  Will = -1 in file handler.
   03  L-RCA-LINE-SIZE       PIC S9(4) COMP.
```

```
*Line Limit; i.e. the logical size of the report line
*from the LINE LIMIT clause in the RD, or its default:
   03  L-RCA-LINE-LMT        PIC S9(4) COMP.
*Action indicator byte:
*"0" = no change to report status
*"6" = report to be initiated
*"7"   reserved
*"8" = report to be terminated
   03  L-RCA-ACT-IND         PIC X.
*Report status indicator:
*"0" = report never initiated
*"6" = report initiated
*"8" = report terminated
   03  L-RCA-STAT-IND        PIC X.
*Report-name from RD statement:
   03  L-RCA-REP-NAME        PIC X(30).
*Print record format indicator: always = "0"
   03  L-RCA-PRT-FMT         PIC X.
*Line column width override: (1 byte binary held as character)
   03  L-RCA-COL-WIDTH       PIC X.
*Page Limit from PAGE LIMIT clause RD; zero if no PAGE clause.
   03  L-RCA-PAGE-LIM        PIC S9(4) COMP.
*Length of CODE, or zero if no CODE clause.
*The length of the CODE is determined from the length of the CODE
*"literal" or, if the "identifier" form of CODE clause is used,
*from the difference between the record length of the report file
*(as given in the RECORD or BLOCK CONTAINS clause of the FD)
*and the LINE LIMIT (or its default value),
*allowing for the normal carriage control characters.
   03  L-RCA-CODE-LEN        PIC S9(4) COMP.
*Error flag: zero = no error.
*May be set by file handler to non-zero value representing a
*standard error condition for reporting via a subroutine.
*If it is given a value which does not correspond with a known
*error message, the message UNKNOWN ERROR TYPE will be output
*together with information that usually accompanies any message.
   03  L-RCA-ERR-FLG         PIC S9(4) COMP.
*Error code detected by file handler:
   03  L-RCA-FH-ERR          PIC S9(4) COMP.
*Report Number from REPORT-NUMBER location
*zero if DUPLICATED clause not in use.
   03  L-RCA-REP-NUM         PIC S9(4) COMP.
*Location reserved for future communication between file handler
*and report writer.
   03  L-RCA-COMM-AREA       PIC X(8).
```

```
*Location reserved for internal use (not by file handler):
*Data items used by Page Buffer:
*Current margin offset established by SET COLUMN (1 = no margin)
   03  L-RCA-MARG              PIC S9(4) COMP.
*Forced absolute line number set up by SET LINE TO integer.
   03  L-RCA-ABS-LNO           PIC S9(4) COMP.
*Indicator set to "H" "HOLD" status, otherwise space.
   03  L-RCA-HOLD-IND          PIC X.
*General locations used by file handlers:
   03  FILLER                  PIC X(11).
*Data items used by Page Buffer: (not required by file handler)
*Current physical position;
   03  L-RCA-PHYS-POSN         PIC S9(4) COMP.
*Lowest line no. having line buffered.
   03  L-RCA-STL-LOW           PIC S9(4) COMP.
*Highest line no. having line buffered.
   03  L-RCA-STL-HIGH          PIC S9(4) COMP.
*Maximum value permitted for LINE-COUNTER.
   03  L-RCA-MAX-LCT           PIC S9(4) COMP.
*Maximum physical size in bytes of "line" of data;
*this is the largest value that can ever be held in "byte count"
*(L-PRC-BYTE-CNT) of any print line.
*It differs from the line limit (L-RCA-LINE-LMT) in that
*(a) the line limit is a maximum for checking purposes only and
*may never be attained in any actual line of the report,
*(b) lines may contain formatting characters that do not occupy
*a column of print, e.g.
*start- and end-sequence of a "style" (underline, bold etc.)
*shift out and shift in characters used by Kanjii (DBCS)
   03  L-RCA-BYTE-LMT          PIC S9(4) COMP.
*Number of purely formatting characters override; if non-zero, the
*value (L-PRC-BYTE-CNT - L-RCA-FMT-CNT) overrides L-PRC-END-COL;
*it must always be cleared by file handler.
   03  L-RCA-FMT-CNT           PIC S9(4) COMP.
*Indicators, for general use by file handler.
   03  L-RCA-WORK-IND          PIC X OCCURS 4.
*Code Value; zero length if no CODE clause in RD
*initial value set from CODE clause.
*May be referred to in user program as CODE-VALUE [IN report-name]
   03  L-RCA-CODE-VAL.
     05  L-RCA-CODE-CHA        PIC X
         OCCURS 0 TO 4095 TIMES DEPENDING ON L-RCA-CODE-LEN.
*End of report control area.
```

4. **Parameter 3: Report Data**

This parameter contains the **data to be written**. For OPEN, INITIATE, TERMINATE and CLOSE operations, this parameter is a ***dummy*** with a value of zero in the counter L-PRC-BYTE-CNT. The number of bytes to be written may be reduced to the value in L-RCA-LINE-SIZE when it is non-negative.

```
 01  L-PRC-PRINT-REC.
*Physical byte count, not including this 4-byte header;
*will be zero when no data is to be output;
*gives no. of bytes to be written, unless overridden by
*L-RCA-LINE-SIZE set non-negative.
   03  L-PRC-BYTE-CNT        PIC S9(4) COMP.
   03  L-PRC-HEAD.
*Indicator bits, layout is as follows:
*bit 0-3: unused
*bit 4: set if data contains unresolved STYLE sequence(s)
*bit 5: set if data consists only of formatting (STYLE) characters
*bit 6: reserved
*bit 7: set if print data must be flushed to spaces.
*2nd byte is reserved.
     05  L-PRC-HEAD-BYTES    PIC S9(4) COMP.
*Data to be written;
   03  L-PRC-DATA.
     05  L-PRC-DATA-CHA      PIC X
         OCCURS 0 TO 256 TIMES DEPENDING ON L-PRC-BYTE-CNT.
```

### 5.3.8 Sample Independent Report File Handler

The following is the complete code of the standard **MODL** file handler (used for writing to a single report file from a modular system). This file handler is one of the simplest, and so it may be used as a model for your own user-written file handlers, which will require almost all the code that follows, except perhaps for the incrementing and decrementing of the "nest depth" (**W-OPEN-NEST**) which is peculiar to this file handler.

At least one file handler is supplied in source form with this product, giving you a machine-readable copy of most of this coding.

```
 IDENTIFICATION DIVISION.
 PROGRAM-ID.  CRFHMODL.
*
*Independent Report Writer file handler for use in modular program
*
*Purpose:
*    Used when several separately-compiled modules need to access
*    the same report file without continually opening and closing.
*    This file handler does not currently handle more than 1 file.
```

```
*
*Method of use:
*    1.  The control program does one OPEN at start of processing
*        and one CLOSE at very end of all processing.
*        (To satisfy the syntax it should have a minimal
*        REPORT SECTION which is not used.)
*    2.  Each subprogram including control module has an FD
*        & does OPEN, some GENERATEs and CLOSE each time it is
*        CALLed, as though it were the only module using the file.
*
*    This file handler ignores all "nested" OPENs and CLOSEs.
*    Typical sequence of operations:
*
*    a.  Control program does OPEN OUTPUT which is actioned.
*    b.  Subprogram does OPEN which is ignored.
*    c.  Subprogram does INITIATE, several GENERATE's & TERMINATE.
*    d.  Subprogram does CLOSE which is ignored.
*    e.  Many other subprogram CALLs occur in same way.
*    f.  Control program does CLOSE which is actioned.
*
*    Subprograms have to do the (dummy) OPEN and CLOSE as Report
*    Writer requires that every program be logically complete.
 ENVIRONMENT DIVISION.
*
 INPUT-OUTPUT SECTION.
 FILE-CONTROL.
     SELECT PRINT-FILE
* is always overwritten by name specified in program
          ASSIGN TO RPFILE
          FILE STATUS IS W-FCA-STATUS.
 DATA DIVISION.
 FILE SECTION.
 FD  PRINT-FILE
     LABEL RECORDS STANDARD.
*THIS FILE MAY ALSO BE DESIGNATED "RECORDING MODE V"
 01  F-PRINT-RECORD.
     05  F-PRINT-DATA.
       07  F-PRINT-CHAR            PIC X  OCCURS 512.
 WORKING-STORAGE SECTION.
*General locations:
 01  WS-GENERAL.
     05  W-FEED                   PIC S9(4) COMP.
*This location contains the "nest" level of OPEN/CLOSE statements:
     05  W-OPEN-NEST              PIC S9(4) COMP VALUE ZERO.
*Pointer to record data:
     05  W-PTR                    PIC S9(4) COMP.
*Indicator set = "Y" if a the given line of data has been printed:
     05  W-DATA-PRINTED           PIC X.
*File name for print file:
     05  W-FILE-NAME              PIC X(79).
```

```
*Indicator set = "1" if an error occurs on writing.
     05  W-PRINT-ERROR              PIC X.
*File status:
     05  W-FCA-STATUS               PIC XX.
*Standard Linkage:
 LINKAGE SECTION.
*Parameter 1: File Control Area
      COPY RWFCACOM.
*Parameter 2: Report Control Area
      COPY RWRCACOM.
*Parameter 3: Print Line
      COPY RWPLNCOM.
 PROCEDURE DIVISION USING   L-FCA-CNTRL-AREA
                            L-RCA-CNTRL-AREA
                            L-PRC-PRINT-REC.
*
 FILE-HANDLER-CONTROL SECTION.
 FHC-ENTRY.
*Assume successful operation:
     MOVE "00" TO W-FCA-STATUS
*Open file if indicated:
     IF   L-FCA-ACT-IND > "0" AND < "9"
          PERFORM OPEN-FILE.
*Initiate report if indicated:
     IF   L-RCA-ACT-IND = "6"
          PERFORM INITIATE-REPORT.
*Print data if any data present:
     IF   L-PRC-BYTE-CNT NOT = 0
          PERFORM PRINT-DATA.
*Terminate report if indicated:
     IF   L-RCA-ACT-IND = "8"
          PERFORM TERMINATE-REPORT.
*Close file if indicated:
     IF   L-FCA-ACT-IND = "9"
          PERFORM CLOSE-FILE.
     MOVE W-FCA-STATUS TO L-FCA-STATUS.
 FHC-EXIT.
     EXIT PROGRAM.
*Main sections to print the data line.
*
 PRINT-DATA SECTION.
 PDA-ENTRY.
*check not too many characters for print line:
     IF   L-PRC-BYTE-CNT > 512
          DISPLAY "CRFHMODL Error: Line too long - truncated".
     MOVE "N" TO W-DATA-PRINTED
```

```
*If vertical position is zero in paged report, page feed required:
     IF   L-RCA-VERT-POSN = 0
     AND  L-RCA-PAGE-LIM NOT = 0
     AND  W-PRINT-ERROR = "0"
*If FIRST PAGE NO ADVANCING was coded in SELECT statement
*omit first page advance (this ind. is reset by control s/r)
          IF   L-FCA-SUPP-PFD = "1"
               MOVE 1 TO L-RCA-VERT-POSN
          ELSE PERFORM TOP-OF-PAGE.
*Now write data after advancing required distance, unless it was
*written on line 1 when we advanced to top of page:
     IF   W-DATA-PRINTED = "N"
     AND  W-PRINT-ERROR = 0
          PERFORM AFTER-ADVANCING.

*Routine to print at top-of-page.
 TOP-OF-PAGE SECTION.
 TOP-ENTRY.
*If LINE-COUNTER = 1 we can print data at top-of-form,
*otherwise we print blank lines first;
     IF   L-RCA-LINE-CNTR > 1
          MOVE SPACES TO F-PRINT-DATA
     ELSE PERFORM FILL-RECORD
          MOVE "Y" TO W-DATA-PRINTED.
     WRITE F-PRINT-RECORD AFTER ADVANCING PAGE
*If bad File Status, set indicator to prevent further writing
*in case user program has FILE STATUS which is not exemined.
     IF   L-FCA-STATUS NOT = "00"
          MOVE "1" TO W-PRINT-ERROR.
     MOVE 1 TO L-RCA-VERT-POSN.

*Routine to print with appropriate advance (if any)
 AFTER-ADVANCING SECTION.
 ADV-ENTRY.
     PERFORM FILL-RECORD
     SUBTRACT L-RCA-VERT-POSN FROM L-RCA-LINE-CNTR GIVING W-FEED
     WRITE F-PRINT-RECORD AFTER ADVANCING W-FEED.
     IF   L-FCA-STATUS NOT = "00"
          MOVE "1" TO W-PRINT-ERROR.

*Move data into record, allowing fir possible CODE
 FILL-RECORD SECTION.
 FLR-ENTRY.
     IF   L-RCA-CODE-LEN = 0
     AND  L-RCA-MARG NOT > 1
          MOVE L-PRC-DATA TO F-PRINT-RECORD
     ELSE MOVE 1 TO W-PTR
          IF   L-RCA-CODE-LEN > 0
               MOVE L-RCA-CODE-VAL TO F-PRINT-RECORD
               ADD L-RCA-CODE-LEN TO W-PTR
          ELSE MOVE SPACES TO F-PRINT-RECORD
          END-IF
```

```
          IF   L-RCA-MARG > 0
               ADD L-RCA-MARG TO W-PTR
               SUBTRACT 1 FROM W-PTR
          END-IF
          STRING L-PRC-DATA DELIMITED BY SIZE INTO F-PRINT-RECORD
               WITH POINTER W-PTR.

*OPEN the report file
 OPEN-FILE SECTION.
 OPF-ENTRY.
*If OPEN not OUTPUT or EXTEND, signal error 44 and assume OUTPUT:
     IF   L-FCA-ACT-IND = "5"
          MOVE 44 TO L-RCA-ERR-FLG
          MOVE "1" TO L-FCA-ACT-IND.
*Does not really OPEN the file if the OPEN is "nested".
     IF   W-OPEN-NEST = 0
*Get name of print file
          IF   RETURN-CODE = 0
*OPEN OUTPUT or EXTEND, depending on the Action Indicator.
               IF   L-FCA-ACT-IND = "1"
                    OPEN OUTPUT PRINT-FILE
               ELSE OPEN EXTEND PRINT-FILE
               END-IF
          END-IF
          IF   L-FCA-STATUS NOT = "00"
               MOVE "1" TO W-PRINT-ERROR.
*Increment nest level:
     ADD 1 TO W-OPEN-NEST.

*Initiate the report
 INITIATE-REPORT SECTION.
 INT-ENTRY.
*In this section we do any action consistent with INITIATing
*the report.  In this routine nothing need be done.

*Terminate the report
 TERMINATE-REPORT SECTION.
 TRM-ENTRY.
*In this section we do any action consistent with TERMINATing
*the report.  In this routine nothing need be done.

*Close the report file
 CLOSE-FILE SECTION.
 CLF-ENTRY.
*Does not really CLOSE the file if the CLOSE is "nested".
     SUBTRACT 1 FROM W-OPEN-NEST
     IF   W-OPEN-NEST = 0
          CLOSE PRINT-FILE.
     MOVE "0" TO W-PRINT-ERROR.
*End of file handler.
```

# 6

# Migration from OS/VS or DOS/VS COBOL Report Writer

This part is a guide to help you to move all the Report Writer code in your program sources successfully from OS/VS COBOL or DOS/VS COBOL Report Writer to new Report Writer.

# 6.1 Re-compiling OS/VS and DOS/VS COBOL Sources

You will be able to obtain correct working versions of all your OS/VS COBOL or DOS/VS COBOL Report Writer programs using new Report Writer. The migration of most Report Writer programs require no changes to the current Report Writer code. However, new Report Writer produces more information, in the form of informational (severity "I") messages to make certain processes and assumptions clear to you. You should therefore expect a number of these severity "I" messages to be produced when you submit a typical migrated Report Writer program to the precompiler.

The precompiler is also stricter than both OS/VS COBOL and DOS/VS COBOL in its checking of your Report Writer for adherence to syntax rules and in the additional consistency checks that it performs. In some cases, the precompiler will produce warning (severity "W") - or occasionally even severity "E" or "S" messages - in a program that the previous compiler accepted without any diagnostic messages. (You may find that the situations that cause these messages recur in all the programs originally written by the same individuals, because a certain style of coding is used consistently.) However, even severity "W" messages normally do not require a change to your program source, since your program will behave at run time exactly as it did under the previous compiler.

The following sections list the messages that have occurred when a large sample of "clean" migrated Report Writer programs were precompiled, compiled and run. They are listed in order of severity. This part outlines what action, if any, you should take for each severity level. A more detailed explanation of the messages will be found in Appendix E, where all diagnostic messages are listed.

## 6.1.1 Informational (I-level)

Informational messages do not indicate a fault of any kind and do not require you to take any action. You can suppress the listing of I-level messages by specifying the option FLAG(W). If you are running under CMS or TSO, the option MSGL(3) may be used to prevent I-level messages being displayed on your screen.

The following severity-I messages may result from "clean" migrated Report Writer programs.

**RW-001-I No Report Writer data entries were found in this program.**

**Meaning** This message should be expected if your program has no REPORT SECTION. You may wish to precompile every COBOL program since you cannot easily tell which programs contain Report Writer code and which do not. You may decide to place a NORW directory at the start of your source program to inhibit the scan for non-existent Report Writer code. (See *Installation and Operation*.)

**Remedy** None required.

**RW-008-I FD has record definition but no RECORD CONTAINS: compiler may assume variable-length.**

**Meaning** This message may result if your report file FD is followed by a record description and the FD entry has no RECORD CONTAINS clause. New Report Writer creates a record description after your FD to enable it to output generated Report Writer records. If no RECORD CONTAINS clause is present, it sets up the record with a length equal to the longest actual line to be written (rounded up to a multiple of 4 and incremented by 1 for any carriage control character). Since your FD already has a record description, its length is likely to be different from the length of Report Writer's generated record. If RECORDING MODE F is specified, a compiler error will result (see 6.1.3 below). If not, the result may be unexpected variable-length records.

**Remedy** It is probable that the record description after the FD entry was originally coded under the mistaken assumption that it is required. A record description is not required after the FD for a report file, unless the program issues WRITEs independently to the same file. Check whether the record description is referred to and, if not, remove it.

If the record description is referred to, you should add a RECORD CONTAINS clause to the FD entry, specifying the length in bytes of the record description that follows the FD.

**RW-030-I PAGE LIMIT will never be reached.**

**Meaning** This message implies that your PAGE LIMIT is larger than it need be since no report line will ever reach it. There are two cases where this may happen. Either you have a PAGE FOOTING group, using absolute LINE numbers, which does not reach the PAGE LIMIT. Or, you have no PAGE FOOTING group but the value of LAST DETAIL or FOOTING is less than the PAGE LIMIT so that body groups can never reach it. Possibly the value of PAGE LIMIT was coded under the mistaken assumption that it should represent the physical size of the printed page.

**Remedy** None required, but to eliminate the message you may reduce the value of the PAGE LIMIT to that of the last line of the PAGE FOOTING group, or to the value of LAST DETAIL or FOOTING.

**RW-085-I New reserved word accepted as data-name.**

**Meaning** This message appears when you use one of Report Writer's new reserved words as a SOURCE or SUM operand, for example "SOURCE FUNC" or "SUM COLS". Report Writer detects this from the context and allows the clause as you intended so that the new reserved words have as little impact as possible on migrated programs.

**Remedy** None required, but to eliminate the message you may edit the program to change the data-name, for example from FUNC to WS-FUNC.

**RW-110-I Elementary item has no size: will not be output.**

**Meaning** This message appears when your elementary SOURCE item has no PICTURE clause. This technique has been used frequently by programmers to define "dummy" entries in a "totals-only" report, so that there will be a SOURCE identifier to correspond with every SUM identifier. For example:

```
01  DUMMY-GROUP      TYPE DETAIL.
  03  LINE PLUS 1.
    05                SOURCE AMOUNT.

01  TYPE CF control-name.
  03  LINE PLUS 1.
    05  COLUMN 1     PIC Z(6)9     SUM AMOUNT.
```

**Remedy** No action is required, but if you wish to eliminate the message, simply attach a PICTURE to the entry:

```
01  DUMMY-GROUP      TYPE DETAIL.
  03  LINE PLUS 1.
    05                PIC Z(6)9    SOURCE AMOUNT.
```

**RW-146-I No GENERATE issued for this DETAIL.**

**Meaning** The DETAIL group referred is probably a dummy group, coded in a "totals-only" report, as illustrated above under message RW-110. Without the SOURCE clauses in the dummy group, OS/VS COBOL and DOS/VS COBOL will not SUM these fields.

**Remedy** None required. New Report Writer does not require dummy groups in this situation, because it does not require a SOURCE to correlate with each SUM. So, if this is the only purpose of the dummy group, you may eliminate this message by removing the dummy group.

**RW-161-I SUM will be totalled UPON generation of xx due to SOURCE SUM correlation. or**

**RW-162-I SUM will be totalled also UPON generation of xx.**

**Meaning** One of these messages should appear for each SUM identifier in your program which is not the name of another REPORT SECTION item. See Appendix E under these messages for additional commentary.

**Remedy** None required.

**RW-200-I MODE PRNT has been assumed for file due to CODE clause.**

**Meaning** This message will appear if a report file has more than one RD, and they have CODE clauses with "literals" which are not all of the same length (counting an absent CODE clause as a "zero-length literal"). Clearly, this situation could not be implemented easily by means of normal WRITE statements, so the precompiler uses an independent report file handler. The PRNT file handler, which produces a similar output to basic COBOL WRITEs, is used if no other file handler is specified (in a MODE clause or by a parameter to the precompiler). For more information about file handlers, see 2.2 *Report Files*.

**Remedy** None required. However, if the FD is followed by a record description, message RW-180-E will also appear (see below). You might consider removing all CODE clauses from the program and assigning each affected report to a separate print file instead, thus avoiding the need to run the utility print program which makes multiple passes through your print file.

**RW-213-I Value xx assumed for LINE LIMIT.**

**Meaning** This message will appear for each RD in your program. It shows the rightmost position permitted for any character in a report line.

**Remedy** None required.

### 6.1.2 Warning (W-level)

Warning messages indicate that the code found contains an infringement of the syntax, but that the program will execute as intended. In general, you need not correct W-level violations to ensure that the program will be compatible with OS/VS COBOL or DOS/VS COBOL. It is possible for a program source which produces no messages under the previous compiler to produce several W-level messages when precompiled.

The following W-level messages may result from "clean" migrated Report Writer programs. A simple change is suggested for each case, should you prefer to alter the source to make it clearer and easier to maintain, and to conform to the ANS-74/85 Report Writer standard.

**RW-019-W Report xx in FD has no REPORT SECTION entry.**

**Meaning** This message indicates that a REPORT clause in an FD refers to a report-name that has no RD entry in the REPORT SECTION. OS/VS COBOL, DOS/VS COBOL and the precompiler all ignore the report-name.

**Remedy** No action is required but if you want to remove this message, delete the unused report-name from your program.

**RW-031-W PAGE LIMIT increased to value of LAST DETAIL or FOOTING.**

**Meaning** This message results when the PAGE LIMIT is less than the value of LAST DETAIL or FOOTING, for example:

```
RD  REPORT-ONE
    PAGE LIMIT 50 LINES
    LAST DETAIL 54
    FOOTING 56.
```

**Remedy** No action is required since both OS/VS COBOL, DOS/VS COBOL and the precompiler all override the inadequate PAGE LIMIT. If you want to avoid this message, increase the PAGE LIMIT integer to the value of LAST DETAIL or, if present, FOOTING:

```
RD  REPORT-ONE
    PAGE LIMIT 56 LINES
    LAST DETAIL 54
    FOOTING 56.
```

**RW-051-W duplicated CONTROL: ignored.**

**Meaning** This message implies that your report description lists the same control field twice, for example:

```
RD  REPORT-ONE
    PAGE LIMIT 60 LINES
    CONTROLS ARE ACCOUNT-CODE
                 ACCOUNT-CODE
                 DISTRICT-CODE.
```

**Remedy** No action is required but if you want to remove this message you should simply remove the second occurrence of the control, since it serves no purpose.

**RW-064-W LINE entries nested: previous LINE assumed level xx.**

**Meaning** This message is issued when two LINE clauses are at different levels. The commonest instance is where a group with more than one LINE clause has the first LINE clause at the 01-level:

```
01  TYPE REPORT FOOTING LINE NEXT PAGE.
  03  COLUMN 1 ...
  03  LINE IS PLUS 1.
    05  COLUMN 1 ...
```

**Remedy** No action is required because OS/VS COBOL, DOS/VS COBOL and the precompiler allow this situation. If you want to remove this message, restructure the code as follows:

```
01  TYPE REPORT FOOTING.
  03  LINE NEXT PAGE.
    05  COLUMN 1 ...
  03  LINE IS PLUS 1.
    05  COLUMN 1 ...
```

**RW-070-W COLUMN entries following LINE assumed to be subordinate to it.**

**Meaning** This message will appear if a COLUMN entry is not at a level lower than the preceding LINE entry, as in the following example:

```
01  TYPE PAGE HEADING.
  03  LINE 1  COLUMN 1  ...
  03  COLUMN 21  ...
```

The second COLUMN clause is not strictly subordinate to the LINE clause.

**Remedy** No action is required because OS/VS COBOL, DOS/VS COBOL and new Report Writer allow this arrangement of clauses. If you wish to eliminate this message, you may restructure the code as follows:

```
01  TYPE PAGE HEADING.
  03  LINE 1.
    05  COLUMN 1   ...
    05  COLUMN 21  ...
```

**RW-072-W Recurrence of same absolute LINE merged with preceding.**

**Meaning** This message will appear if the same absolute LINE clause is repeated in successive entries with different COLUMN clauses, for example:

```
01  TYPE PAGE HEADING.
  03  LINE 1  COLUMN 10 ...
  03  LINE 1  COLUMN 30 ...
```

This is a loose interpretation of the ANS 68 standard allowed by the older compilers.

**Remedy** No action is required because OS/VS COBOL, DOS/VS COBOL and new Report Writer allow this arrangement of clauses. If you wish to eliminate this message, you may restructure the code as follows:

```
01  TYPE PAGE HEADING.
  03  LINE 1.
    05  COLUMN 10 ...
    05  COLUMN 30 ...
```

**RW-096-W LINE clauses in group will cause it to extend beyond bottom limit.**

**Meaning** This message will appear if a report group ends too far down the page. For example:

```
RD  REPORT-ONE
    PAGE LIMIT IS 60 LINES
    FIRST DETAIL 5
    FOOTING 58.
*
01  TYPE REPORT HEADING.
  03  LINE 1 ...
    05  COLUMN 1 ...
  03  LINE PLUS 64 ...
    05  COLUMN 1 ...
*
01  TYPE PAGE HEADING.
  03  LINE 1 ...
    05  COLUMN 1 ...
  03  LINE PLUS 4 ...
    05  COLUMN 1 ...
```

Both report groups in this example will invoke this message. The REPORT HEADING stretches down to beyond the PAGE LIMIT (the absolute limit on all report line positions). The PAGE HEADING encroaches into the FIRST DETAIL position. (Note, if the second line of the PAGE HEADING is an absolute line such as LINE 5, instead of the equivalent LINE PLUS 4, OS/VS COBOL and DOS/VS COBOL do give an error message.)

**Remedy** No action is required because OS/VS COBOL, DOS/VS COBOL and the precompiler will all accept the REPORT HEADING and PAGE HEADING as described and will begin the DETAIL groups immediately after the PAGE HEADING. To clear these conditions, you should aim to adjust the PAGE LIMIT sub-clauses so that they truly represent the regions of your page, without affecting any other part of the report. If you alter the PAGE LIMIT, and require complete compatibility, it is advisable to include both a LAST DETAIL and a FOOTING clause to ensure that your DETAIL and CH/CF groups come down to the same lowest position as before. The above code can now be rewritten as follows:

```
RD  REPORT-ONE
    PAGE LIMIT IS 60 LINES
    FIRST DETAIL 6
    LAST DETAIL 58
    FOOTING 58.
```

**RW-106-W This RH group will have own page: NEXT GROUP NEXT PAGE assumed.**

**Meaning** This message appears if your REPORT HEADING group has no NEXT GROUP NEXT PAGE clause (which usually means that the first PAGE HEADING should follow it on the same page) but there is no room to print the REPORT HEADING above the first PAGE HEADING between HEADING and FIRST DETAIL, as in this example:

```
RD  REPORT-ONE
    PAGE LIMIT IS 60 LINES
    HEADING 1
    FIRST DETAIL 4.
*
01  TYPE IS REPORT HEADING.
  03  LINE 1.
    05  COLUMN 1    PIC  X(40)   SOURCE REPORT-NAME.
  03  LINE PLUS 2.
    05  COLUMN 1    PIC  X(40)   VALUE ALL "*".
*
01  TYPE IS PAGE HEADING.
  03  LINE PLUS 1.
    05  COLUMN 1    PIC  X(40)   SOURCE COMPANY-NAME.
```

**Remedy** No action is required because OS/VS COBOL and DOS/VS COBOL Report Writer also place the REPORT HEADING on a page by itself and your results will be identical. If you wish the REPORT HEADING to temporarily push down the PAGE HEADING, omit the FIRST DETAIL clause. If you wish to avoid this message, add the NEXT GROUP NEXT PAGE clause:

```
01  TYPE IS REPORT HEADING   NEXT GROUP NEXT PAGE.
```

**RW-107-W This RF group will have own page: NEXT PAGE assumed.**

**Meaning** This message appears if your REPORT FOOTING group begins with an absolute LINE without a NEXT PAGE phrase (which usually means that it should follow the last PAGE FOOTING on the same page) but the LINE number is not greater than the last LINE position of the PAGE FOOTING, as in this example:

```
RD  REPORT-ONE
    PAGE LIMIT IS 60 LINES
    LAST DETAIL 54
    FOOTING 56.
*
01  TYPE IS PAGE FOOTING.
  03  LINE 58.
    05  COLUMN 1    PIC  X(10)   VALUE "REPORT ABC".
*
01  TYPE IS REPORT FOOTING.
  03  LINE 1.
    05  COLUMN 1    PIC  X(13)   VALUE "END OF REPORT".
```

**Remedy** No action is required because OS/VS COBOL and DOS/VS COBOL Report Writer also place the REPORT FOOTING on a page by itself and your results will be identical. If you wish to avoid this message, add a NEXT PAGE phrase to the LINE clause of the REPORT FOOTING:

```
01  TYPE IS REPORT FOOTING.
  03  LINE 1 ON NEXT PAGE.
    05  COLUMN 1    PIC  X(13)   VALUE "END OF REPORT".
```

**RW-142-W No INITIATE statement found for this report.**

**RW-143-W No TERMINATE statement found for this report.**

**Meaning** These messages may appear if your original program has no INITIATE or TERMINATE for a report. Your program may have operated successfully under the previous compiler without one or both of these statements. ANS standards require that every Report Writer program must perform an INITIATE at the start and a TERMINATE at the end of each report. If the INITIATE is not performed, a run time error message 14 will be issued from your program and the INITIATE will be implicitly performed. If the TERMINATE is not performed, the last set of CONTROL FOOTING groups, the last PAGE FOOTING and the REPORT FOOTING, as applicable, will be lost from your output.

**Remedy** If the INITIATE is missing, it is advisable to add it to the source. If in doubt, insert it immediately after the OPEN for the report file. If the TERMINATE is missing and you are satisfied that it was not omitted deliberately to prevent the final groups being printed (mentioned in the preceding paragraph), add it to your source. If in doubt, insert it immediately before the CLOSE for the report file. For further information, see 4.1.1 Sequence of Operations.

**RW-151-W Superfluous period: ignored.**

**Meaning** OS/VS COBOL and DOS/VS COBOL are tolerant of superfluous period characters coming at the end of an entry, for example:

```
05  COLUMN 23  PIC Z(6)9  SOURCE AMOUNT. . .
```

**Remedy** No action is required, but if you want to remove this message, simply remove any extra periods appearing after the first period.

## RW-163-W Item not in REPORT SECTION is accumulated on each GENERATE.

**Meaning** This message should never appear in a correct and logical OS/VS COBOL or DOS/VS COBOL program. It suggests a serious discrepancy in your original program. The message indicates that your program has a SUM clause whose operand is not a SOURCE in a DETAIL group or another SUM in your REPORT SECTION. This condition is not flagged by the older compilers but it will not perform any adding and will produce a value of zero in the report. The precompiler, on the other hand, processes the SUM clause by accumulating the field on each GENERATE.

**Remedy** If the report is producing a zero value and you are satisfied with it, you may substitute VALUE ZERO for the SUM clause. If you decide that the field should be accumulated, you should decide whether to allow it to accumulate on each GENERATE. If you decide that it should be accumulated only on the GENERATE of certain DETAIL groups, add the phrase

```
UPON detail-group-name(s)...
```

to the SUM clause.

**RW-250-W Item overlaps or is to left of item in same line.**

**Meaning** This message appears when the COLUMN entries within a line are not in ascending sequence, or, taking into account their sizes, are found to overlap. OS/VS COBOL and DOS/VS COBOL allow COLUMN entries to appear in any order and to overlap to any extent. It simply stores them into a line initially set to spaces in the order they were coded. Each entry may have any starting COLUMN and byte length. No check is performed as to whether some data has already been stored in any of the target positions. Here is an example:

```
03  LINE PLUS 1.
  05  COLUMN 40  PIC X(22)   VALUE "TOTAL COST = ".
  05  COLUMN 54  PIC Z(5)9   SOURCE WS-TOTAL-COST.
  05  COLUMN 34  PIC Z(5)9   SOURCE WS-MONTHLY-COST.
  05  COLUMN 24  PIC X(10)   SOURCE MONTH-NAME.
```

**Remedy** If you are satisfied with your current version of the program, then you need not make any change. In the case above, the first field is longer than it need be. The second field overwrites the excess spaces so no harm results. The third field has its COLUMN number "out of sequence" but it does not overlap any other field. It may therefore be left as it is.

Since overlapping has serious implications, you may prefer to remove it. In the case above, the PICTURE may be shortened or simply removed. It is possible that an unintended overlap will become more serious with time, especially when larger values need those higher-order digit positions that might be overlaid by another field. If you cannot rearrange the COLUMN numbers or reduce the PICTURE sizes, try a "staggered" layout, such as the following:

```
$$$$$$$$$.99       $$$$$$$$$.99       $$$$$$$$$.99  - LINE PLUS 1
          $$$$$$$$$.99       $$$$$$$$$.99            - LINE PLUS 1
```

If your fields are simply out of order, rearranging them by ascending COLUMN number will make it easier for you to detect genuine cases of overlap. (If the last entry in the example had been mistyped as COLUMN 25, it would have overwritten the top digit of the monetary value on its right!)

### 6.1.3 More Severe (E- and S-level) Messages

**IGYPA3107-S "UNSTRING INTO" identifier <name (usage)> was invalid ...**

**Meaning** Depending on which COBOL compiler you are using, one of these messages will appear when your program has a CONTROL data item which is not USAGE DISPLAY. The VS COBOL II error can occur only when the option NOXCAL is in effect. If the PRTX option is in effect, this message will have been placed on the affected CONTROL clause.

**Remedy** This condition is corrected by REDEFINing your CONTROL data item as PIC X(...) and using the data-name of the redefinition instead. An equivalent method is to make your CONTROL item a group-level item:

```
05  ACCOUNT-NO-X.
  07  ACCOUNT-NO        PIC 9(5) COMP-3.
...
... CONTROL IS ACCOUNT-NO-X...
```

With VS COBOL II, you may avoid the problem by specifying the (default) option XCAL.

**IGYPS2052-S A "RECORDING MODE" of F was specified for file ...**

**Meaning** This compiler error message appears as a result of the precompiler message RW-008-I (see 6.1.1 above).

**Remedy** As under RW-008-I (see 6.1.1 above).

**RW-149-E Report assigned to more than one FD: file handler DUPL required.**

**Meaning** Defining the same report-name in the REPORT clause of more than one FD is allowed in new Report Writer, as in OS/VS COBOL and DOS/VS COBOL, but for quite different reasons. OS/VS COBOL allows a report to be written to up to two files at the same time, but new Report Writer follows the Codasyl standard by requiring you to select only a single file to be written to at INITIATE time. Thus the following is allowed by both:

```
FD  FILE-A  ...
    REPORT IS ANNUAL-SUMMARY.
FD  FILE-B  ...
    REPORT IS ANNUAL-SUMMARY.
RD  ANNUAL-SUMMARY ...
```

but new Report Writer requires you to code UPON FILE-A or UPON FILE-B after INITIATE ANNUAL-SUMMARY.

**Remedy** You can still write to two files simultaneously if you need to but this must be achieved using a file handler that performs a separate WRITE to each file. See 5.1 *Multiple Reports*. The file handler is supplied with all versions of the run time library. You should now add a MODE DUPL clause to your SELECT statement as follows:

```
FILE-CONTROL.
    SELECT FILE-A ASSIGN TO DDname MODE DUPL.
FD  FILE-A  ...
    REPORT IS ANNUAL-SUMMARY.
```

**RW-020-S Group item has elementary clauses: ignored.**

**Meaning** OS/VS COBOL and DOS/VS COBOL allow entries below report group level to have any level-numbers from 02 to 49. The precompiler performs the same strict checks on level-numbers that you would expect in any other DATA DIVISION section. In the following case, for example:

```
01  TYPE PH.
  07  LINE 2.
    03  COLUMN 1   PIC Z(5)9   SOURCE AMOUNT-1.
    06  COLUMN 11  PIC Z(5)9   SOURCE AMOUNT-2.
```

you will see the following diagnostic messages:

**RW-069-W COLUMN should be subordinate to LINE: LINE + 0 assumed.**

**RW-020-S Group item has elementary clauses: ignored.**

It is essential to remove the error condition by renumbering the levels so that:

- LINE clauses are subordinate to (01-level) report groups,
- COLUMN clauses are subordinate to LINEs.

The above example, when corrected, should appear as:

```
01  TYPE PH.
  03  LINE 2.
    05  COLUMN 1   PIC Z(5)9   SOURCE AMOUNT-1.
    05  COLUMN 11  PIC Z(5)9   SOURCE AMOUNT-2.
```

**RW-180-E CODE not allowed in RD where a record description follows FD: discarded.**

**Meaning** Your FD has more than one RD with "CODEs" of unequal size and the corresponding FD is followed by an 01-level record description. (See RW-200-I above). The precompiler implements the CODE clause in this case through a file handler that does not permit access to a separate file record.

**Remedy** A record description is not required after an FD that has a REPORT(S) clause, unless your program does a WRITE independently to the same report file. If your program does not do a WRITE to the same file, the entire record description is redundant and can be removed. If your program does do a WRITE to the same file, you should convert the WRITE to a GENERATE, if necessary by defining a new RD for the same file containing no PAGE clause and a simple DETAIL group for each special record format written to the file.

It is possible for your program to cause other severe diagnostics to appear. Some may be through the unexpected tolerance of the previous compiler of some erroneous construct. It should be clear from the message what you need to do to correct the error. The descriptions of the messages in Appendix E will help you, and you may also refer to the main sections describing the clauses.

## 6.2 Other Considerations

The following situation does not result in a diagnostic message and you should be aware of it, so that you will recognize the circumstances if it occurs in any program.

### 6.2.1 Long Control Fields Truncated

**Meaning** If **NOXCAL** is the option in use, there is a limit to the length of the saved control fields. This limit, which is 80 bytes as supplied, may be set to any value up to 256 bytes using the **CTRLEN** option. If your program contains control items longer than this limit, the effect will be an obvious truncation in the contents of the control fields whenever they are printed in your report. When the **XCAL** option is used, there is no such restriction.

**Remedy** To correct this problem, if VS COBOL II is in use, alter your choice of option from **NOXCAL** to **XCAL**. Or, for either compiler, set the **CTRLEN** option to a size that is likely to be larger than any control used in any candidate program. If you are in doubt, a maximum value of 256 will not be harmful, albeit a little inefficient.

## 6.3 Physical Comparison of Report Writer Output

Once you have corrected any syntactic discrepancies in your original Report Writer code, your new Report Writer code should now produce a layout that is visibly identical to the output you obtained under the previous compiler's built-in Report Writer.

There is however one known difference that may be apparent at the physical level, for example if you use a utility program to compare the print files produced by the two Report Writer systems: the OS/VS COBOL and DOS/VS COBOL Report Writer prints a blank line at the top of each page, even if there is data on LINE 1, whereas new Report Writer, like basic COBOL, implements the latter by a single WRITE at top-of-page.

If you require the print records to be identical in physical arrangement to that produced by your original programs (for example if you use special de-spooling software that reads your print file and expects the first line of data on each page to be blank), you may achieve this by adding the clause **MODE IS PRNT** to the SELECT statement of your report file, since the PRNT file handler is designed to emulate the previous compilers' Report Writer output routine (see 5.3.2 *Supplied File Handlers*).

## 6.4 Unreachable Code

The precompiler generates statements to perform certain extra checks that may prove to be unnecessary in some programs and may therefore show up as code that "can never be executed" with the OPTIMIZE option of the IBM COBOL compiler and be deleted. There are sound reasons for all these cases and they do not indicate any fault in the code generation. For example, the precompiler will generate a "branch around" before the block of PERFORMed generated procedures in case there should be a "fall-through" from the preceding paragraph. Naturally, the precompiler does not examine the structure of the rest of the program to ascertain whether such a fall-through is actually possible, since this would mean duplicating a task for which the compiler itself is best suited, at the cost of a prohibitive overhead. Other extra checks which may prove unnecessary are:

- SIZE ERROR checks during the accumulation of SUM fields.
- Checks on whether a report has been INITIATEd.

# Appendices

# Appendix A

## List of Post-1968 Extensions

This section lists the extensions to the ANSI 1968 COBOL report writer standard that are included in COBOL Report Writer. The extensions are marked as follows:

| | |
|---|---|
| **ANS-68** | features *"held over"* from the ANS-68 standard; |
| **IBM** | IBM's extensions to its ANS-68 implementation in OS/VS and DOS/VS COBOL; |
| **ANS-74** | changes introduced in the ANSI 1974 standard; |
| **ANS-85** | changes introduced in the ANSI 1985 standard; |
| **Codasyl** | Codasyl extensions beyond the ANS-85 standard - potential features in a future ANS COBOL standard. |

Unmarked extensions are those introduced by SPC Systems. Not all the changes found in ANS-74 are listed here because the changes that represent restrictions to ANS-68 have not been implemented. COBOL Report Writer is thus an optimal merging or best of all worlds from the three standards.

⇒ Items marked in this way are **recent** additions, new to this release.

1. FILE-CONTROL and FILE SECTION

- **MODE** clause to enable processing by an Independent Report File Handler.
- **PAGE BUFFER** clause to allow each page to be held in memory in order to set up an irregular format.

⇒ **RANDOM PAGE** clause to allow the page's current line and column to be repositioned like a "cursor".

- **DUPLICATED** clause to reduce coding when program has more than one report with a similar layout.
- (**ANS-68**) Report file **FD** may be followed by a *record description* and may be written to independently.
- ¶ (**ANS-85**) **FD** for report file may have a **GLOBAL** clause and/or an **EXTERNAL** clause.
- ¶ **FIRST PAGE NO ADVANCING** clause, preventing initial page advance.

⇒ **STYLE** clause to facilitate special effects in output device.

⇒ **REPORTS ARE ALL** option to assign all reports to a single file.

⇒ (**IBM**) A report may be written to up to **two** files simultaneously.

2. PAGE LIMIT Clause

- **PAGE LIMIT** phrases become clauses in their own right and PAGE LIMIT may be last.
- **DETAIL** in **FIRST / LAST DETAIL** may be abbreviated as **DE**.

- **FIRST BODY GROUP** alternative spelling for FIRST DETAIL.
- **LAST DE OR CH / DETAIL OR CONTROL HEADING** alternative spellings for LAST DETAIL.
- **LAST CF / CONTROL FOOTING / BODY GROUP** alternative spellings for FOOTING.
- **FIRST DETAIL** defaults to line following PAGE HEADING.
- **LAST DETAIL** defaults to line preceding PAGE FOOTING.
- **+/PLUS** form of FOOTING.
- **FOOTING** defaults to line before PAGE FOOTING group, or to PAGE LIMIT.
- *Identifier* operand of **LAST DETAIL**.
- (**ANS-74**) Word **LINE** or **LINES** not required.

3. Rest of RD

- **REPORT** as an alternative word for **FINAL**.
- **LINE LIMIT** clause.
- **OVERFLOW** clause to check *arithmetic expressions* for size error.
- **SUM OVERFLOW** clause to check *totals* for size error.
- **ALLOW (NO) SOURCE SUM CORR** clause to enable/disable *SOURCE SUM correlation*.
- (**IBM**) CONTROL operand **FINAL** is assumed if not declared.
- (**IBM**) Optional **WITH** before **CODE**.
- (**ANS-68**) **SUM**ming of non-REPORT SECTION item takes place when DETAIL generated with same item as a SOURCE (*SOURCE SUM correlation*).
- (**ANS-68**) *Control data-names* may be **subscripted**.
- (**ANS-68**) *Control fields* may be referenced in any group and, at CONTROL FOOTING time, *pre-break* values are supplied.
- (**ANS-74**) *Literal* form of CODE clause.
- (**Codasyl**) Optional word **IS** with **CODE**.
- (**Codasyl**) **CODE** may be of any length.
- (**Codasyl**) *Identifier* form of CODE clause.
- (**ANS-85**) **GLOBAL** clause, enabling the report, or its groups, to be accessed from within a contained program.

⇒ **STYLE** clause to facilitate special effects in output device.

4. Report Groups (General)

- **PLUS** may be written as **+** whenever used.
- Report Groups may have any number of group or elementary levels.
- (**ANS-68**) Report group may consist of elementary *01*-level entry only.
- (**ANS-74**) The default qualifier for **PAGE-COUNTER** and **LINE-COUNTER** in the REPORT SECTION is the current report.

- The default *qualifier* for **PAGE-COUNTER** and **LINE-COUNTER** in a USE BEFORE REPORTING section is the report containing the group referred to.

5. TYPE Clause

- Word **TYPE** optional.
- **TYPE DETAIL** assumed if no **TYPE** clause.
- *Control-name* need not follow **CH** if only one control present, or **CF**.
- **OR PAGE** option of **CONTROL HEADING** for outputting group after page advance even if no control break.
- (**Codasyl** ("ON")) Optional word **FOR** or **ON** after **CH** and **CF**.

⇒ **CF** may be used for more than one level.

⇒ **CF FOR ALL**, meaning CF for all levels of control.

6. LINE Clause

- **LINE** alone means **LINE + 1**.
- **Absolute** LINE may follow **relative** LINE provided first LINE is absolute.
- **NEXT PAGE** phrase allowed on LINEs other than first in RH and RF.
- **LINE** may have no subordinate **COLUMNS**, thus producing blank line.
- *Multiple* form to allow several lines to be defined in one entry.
- (**ANS-68**) LINE may be coded as though subordinate to another LINE (although a Warning is issued).
- (**ANS-68**) **Relative LINE** allowed at start of **PAGE FOOTING**.
- (**ANS-74**) LINE *integer* **ON NEXT PAGE** option.
- (**ANS-74**) **LINE NEXT PAGE** not allowed in types **PH**, or **PF**. (Legacy compilers do not diagnose this but the code fails in consequence.)

⇒ (**IBM**) Same **absolute** LINE number may be repeated with each COLUMN.

7. COLUMN Clause

- **COLUMN** may be shortened to **COL**.
- **COLUMN** alone means **COLUMN + 1**.
- **COLUMN + 1** assumed by default for any elementary item beneath LINE level with no name, if *NOOSVS* in effect.
- **RIGHT**, **CENTER**, and **LEFT** phrases.
- *Multiple* form to allow several items to be defined in one entry.
- (**ANS-68**) **COLUMN** may be coded at same level as preceding **LINE** (although a Warning is issued).
- (**Codasyl**) *Relative* form (+ or PLUS).

8. SOURCE Clause

- SOURCE keyword **optional**.
- *Arithmetic expression* form.
- *Multiple* form to allow several items to be defined in one entry.
- (**ANS-68**) **CURRENT-DATE** and **TIME-OF-DAY** may be used as identifiers.
- (**ANS-85**) identifier may be *reference modified*.

9. VALUE Clause

- VALUE keyword **optional**.
- **PICTURE** clause optional with non-numeric literals.
- *Multiple* form to allow several items to be defined in one entry.

10. SUM Clause

- Optional word **OF** after SUM.
- *Cross-foot* and *roll-forward* SUM of **SOURCE** and **VALUE** entries allowed.
- **Totalling** of values in printed **tables**, along any axis.
- SUM allowed in **any TYPE** of group.
- SUM may be used as **term in expression**.
- *Arithmetic expression* allowed as operand.
- *Multiple* form to total another multiple entry.
- (**ANS-68** not in *OS/VS or DOS/VS COBOL*) **UPON** may refer to DETAIL in another report.
- (**ANS-68** allowed but not implemented by *OS/VS or DOS/VS COBOL*) SUM may refer to REPORT SECTION data-name in a **different report** .
- (**ANS-74**) More than one SUM clause may be coded in the same entry.
- (**ANS-74**) If *SOURCE SUM correlation* **not** in effect, SUM adds all operands on each **GENERATE**.

⇒ (**IBM**) *Data-name* of SUM entry may be re-used in different reports and is implicitly qualified by report-name.

11. PICTURE Clause

- "<" (*left-shift*) symbol for variable-length fields.

⇒ ">" symbol as optional terminator for variable-length part.

⇒ General insertion characters using quotes in picture-string. (This was long since considered by **Codasyl** and discarded.)

⇒ (**IBM**) PICTURE symbol **A** may be used even with non-alphabetic literal.

12. NEXT GROUP Clause

- **NEXT BODY GROUP / NEXT DE OR CH GROUP/ NEXT DETAIL OR CONTROL HEADING GROUP** as alternative spellings.
- (**Codasyl**) Optional word **ON** before NEXT PAGE.

13. New Clauses

- **PRESENT / ABSENT [JUST] AFTER PAGE / control / PAGE OR control** as more general alternative to GROUP INDICATE.
- *Multiple-choice* **[PRESENT] WHEN** entry to select one from a set of SOURCE / VALUE terms.

⇒ Special condition **CONTROL IS control-id** for use with PRESENT WHEN and multiple CF group.

- **OCCURS** for repetition with **DEPENDING ON**... and **STEP** phrases.
- **VARYING** clause to enable data-names to vary over a range of values during processing of a repeating item.
- **REPEATED** clause for *side-by-side* presentation of body groups.
- **GROUP LIMIT** clause to give lower limit to body groups.
- **ROUNDED** phrase for SUM / SOURCE entries.
- **FUNCTION** clause for invocation of built-in or user-written routine for special-format displays.

⇒ New FUNCTIONs **CTIME, MONTH, MOVE, YDATE, RYDATE, STATE, STATEF, ZIP**.

- **COUNT** clause, similar to SUM but adding 1 per occurrence.
- (partly **Codasyl**) **PRESENT / ABSENT WHEN** clause to select / deselect any items, lines or groups.

⇒ **MULTIPLE PAGE** clause for spreading a group over several pages.

⇒ **WRAP** clause for automatic continuation on a new line.

⇒ **STYLE** clause to facilitate special effects in output device.

14. PROCEDURE DIVISION

- **SET PAGE TO HOLD/RELEASE** statement to invoke / release Page Buffer.
- **SET LINE** and **SET COLUMN** statements to move vertically and horizontally within the *Page Buffer* or *Random Page*.
- (**IBM**) A *Declarative procedure* may refer to (for example PERFORM) a *non-Declarative procedure*.
- Adding to **LINE-COUNTER** creates an additional gap of that size.
- A REPORT SECTION *data-name* may be the target field of a PROCEDURE DIVISION statement.
- (**IBM**) **MOVE 1 TO PRINT-SWITCH**.
- (**ANS-74**) **SUPPRESS PRINTING** statement, equivalent to MOVE 1 TO PRINT-SWITCH.

- (**ANS-85**) **USE GLOBAL BEFORE REPORTING** form of directive.

⇒ (**Codasyl**) **INITIATE UPON** file-name.

15. Other Features

- *Independent Report File Handlers*, built-in or user-written, for directing report writer output to a special device or to user's own de-spooling software.

⇒ Report writer keywords are only **locally reserved**.

- **SIGN**, **BLANK WHEN ZERO**, and **JUSTIFIED** allowed at group level.

⇒ New form of **SIGN** clause for user-defined treatment of negatives.

- (**ANS-68**) With *summary reporting*, any number of DETAIL groups may be present.
- (**ANS-85**) REPORT SECTION and report writer statements may be used in **nested programs**.
- (**ANS-85**) **Lower-case** valid in all report writer formats.
- (**ANS-85**) New features incidentally affecting report writer, such as: *reference modification*, **">="** and **"<="** operators, subscripting to **7** levels, relative subscripting.
- (**ANS-85**) **REPLACE** statement may affect report writer code.

⇒ **Hexadecimal** Literals in REPORT SECTION.

- **Symbolic Characters** in REPORT SECTION.

⇒ *Double Byte Character Set* (**USAGE DISPLAY-1**) in REPORT SECTION.

⇒ Report writer data-names may be *DBCS*.

⇒ *Fips* Flagging capability.

- Ability to choose only ANS standard report writer subset.

16. General COBOL Features

A number of additional features provided by the precompiler apply to any part of the COBOL source, rather than just to COBOL Report Writer. They are therefore listed here in some detail:

a. In-line Comments

The two-character combination **"*>"** indicates that the rest of the source line is to be treated as a comment, for example:

```
05  WS-EOF          PIC 9.       *> end-of-file indicator
...
MOVE 1 TO WS-EOF                 *> set end-of-file indicator
```

b. Wild Cards in COPY

The two-character combination **"??"** may be coded (within *pseudotext* brackets ==...==) as part of the text to be replaced in a **COPY...REPLACING** or **REPLACE** statement. It causes a successful match with any COBOL word,

or a (non-null) part of a word if coded as such. The "??" pair may also appear in the replacement text, in which case it copies unchanged the fragment of text that was matched with the corresponding "??" in the text being replaced.

This sample replaces a certain parameter in each CALL:

```
REPLACE ==CALL ?? USING W-PARAM-1== BY
        ==CALL ?? USING W-PARAM-2==.
```

This sample changes all words in the source library member beginning with **IN-** to begin instead with **OUT-**:

```
COPY MEMBER1 REPLACING ==IN-??== BY ==OUT-??==.
```

17. Precompiler's Tolerance of Other COBOL Constructs

When using the precompiler in tandem with other precompilers or preprocessors, it is essential to know how the precompiler will react to non-ANS COBOL features in the COBOL source. The precompiler has been designed in general to accept embedded CICS, IMS and DB2 commands and tolerate other alien extensions that might reasonably be expected. In particular, it will accept:

a. The **EXEC ... END-EXEC** construct. The text from EXEC through END-EXEC is copied intact, enabling **CICS** and **database** commands to be embedded in a COBOL Report Writer source.

b. **Unrecognized DATA DIVISION SECTIONs**. Any such SECTION is transcribed intact.

c. **Non-standard characters in the continuation column**. Any character other than **"D"**, **"-"**, **"*"**, **"/"**, and **space** in column 7 is treated as though it were a "*" (*comment*) character. Such lines will be copied intact unless they immediately precede a report writer construct such as REPORT SECTION that would be removed by the precompiler.

d. **Unrecognized PROCEDURE DIVISION statements**. Any unrecognized word found in the PROCEDURE DIVISION will be copied intact unless it **immediately** follows one of the report writer commands such as INITIATE, when it is expected to be the (first) operand of the statement.

# Appendix B

**List of New Reserved Words**

The following list shows the new reserved words used in the *COBOL Report Writer* syntax. Except for SUPPRESS PRINTING which is in the 1974 and 1985 ANS standards, these words are new to all three standards. However, with the exception of DATA-SUB-1/2/3/4, LINE-LIMIT, REPORT-NUMBER, and REPEATED-COUNTER they are **locally reserved only** when the OSVS option is in effect. This means in general that the user may use these names as data-names, file names, etc. provided that, if they are used in the REPORT SECTION, it is only with care to avoid ambiguity. For example, SOURCE IS COLS and SOURCE IS STEP are permitted, but the multiple form SOURCES ARE STEP, COLS would not be correctly parsed. SOURCE IS BUFFER, DUPLICATED would be permitted as these keywords normally appear only in the SELECT clause.

| Keyword | References |
|---|---|
| **ABSENT** | *PRESENT/ABSENT WHEN Clause* |
| **BATCH** | *MODE Clause* |
| **BODY** | FIRST/LAST DETAIL, *NEXT GROUP Clause*) |
| **BUFFER** | *PAGE BUFFER Clause* |
| **CENTER, CENTRE** | *COLUMN Clause* |
| **CODE-VALUE** | *CODE Clause* |
| **COL** | *COLUMN Clause* |
| **COLS** | *COLUMN Clause* |
| **COLUMNS** | *COLUMN Clause* |
| **DATA-SUB-1/2/3/4** | OCCURS Clause |
| **DEFAULT** | PRESENT / ABSENT WHEN Clause |
| **DEPTH** | *OCCURS Clause* |
| **DUPLICATED** | *DUPLICATED Clause* |
| **FUNC** | *FUNCTION Clause* |
| **FUNCTION** | FUNCTION Clause |
| **HOLD** | *SET Statement* |
| **LINE-LIMIT** | *LINE LIMIT Clause* |
| **NEW** | *PRESENT AFTER Clause* |
| **NONE** | *SOURCE Clause* |
| **NUMBERS** | *COLUMN Clause, LINE Clause*) |
| **PRESENT** | *PRESENT AFTER Clause, PRESENT WHEN Clause* |
| **PRINTING** | *SUPPRESS PRINTING Statement* |
| **REPEATED** | *REPEATED Clause* |
| **REPEATED-COUNTER** | *REPEATED Clause* |
| **REPLACE** | *OVERFLOW Clause* |
| **REPORT-NUMBER** | *DUPLICATED Clause* |
| **SOURCES** | *SOURCE Clause* |
| **STEP** | *OCCURS Clause*) |
| **SUPPRESS** | *SUPPRESS PRINTING Statement* |
| **UNLESS** | *PRESENT WHEN Clause* |
| **WIDTH** | *OCCURS Clause* and *REPEATED Clause* |
| **WRAP** | *WRAP Clause* |

Words beginning with the prefix **R - -** (note the double hyphen) must also be avoided because the precompiler uses this prefix for its own generated data and procedure names.

# Appendix C

**Summary of Formats**

**a.** SELECT...ASSIGN clauses

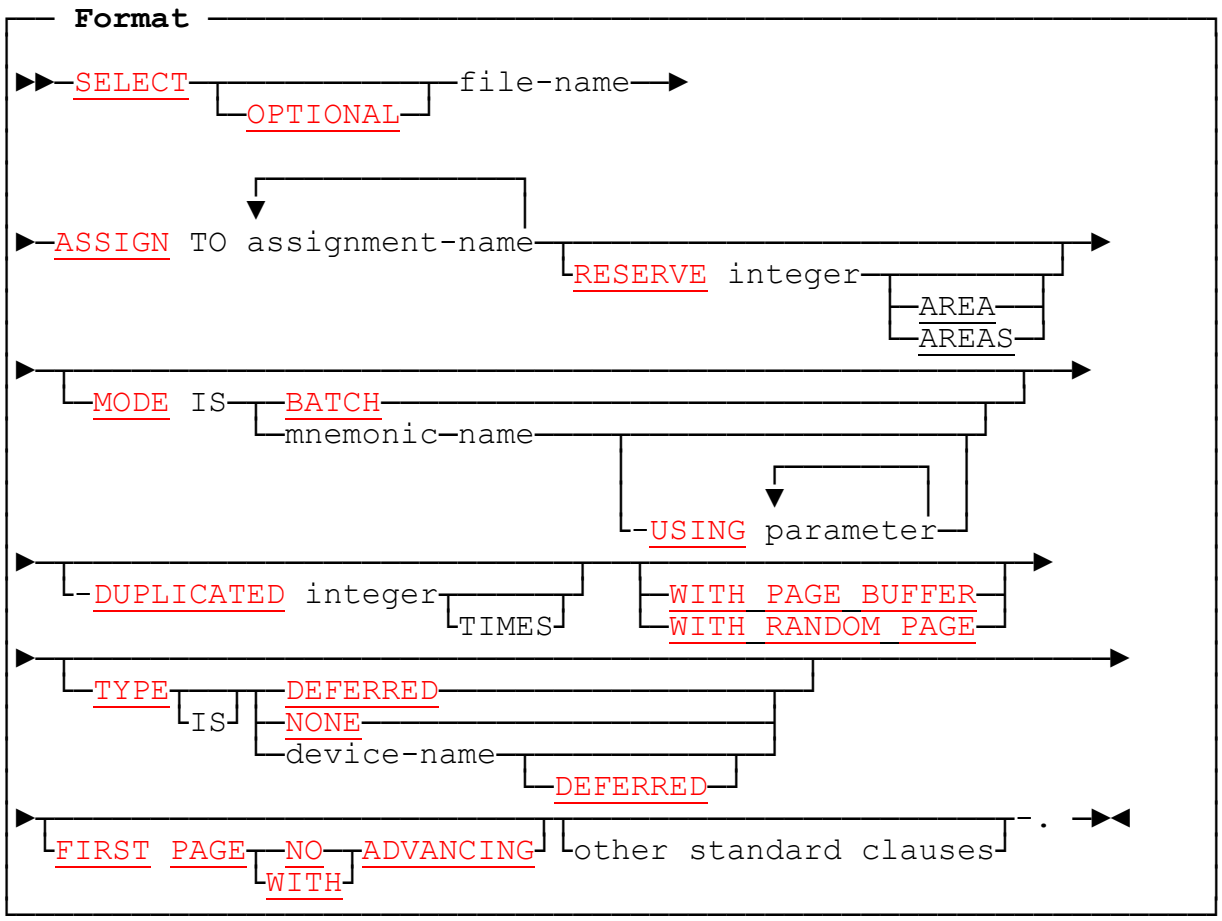


**b.** FILE SECTION entries

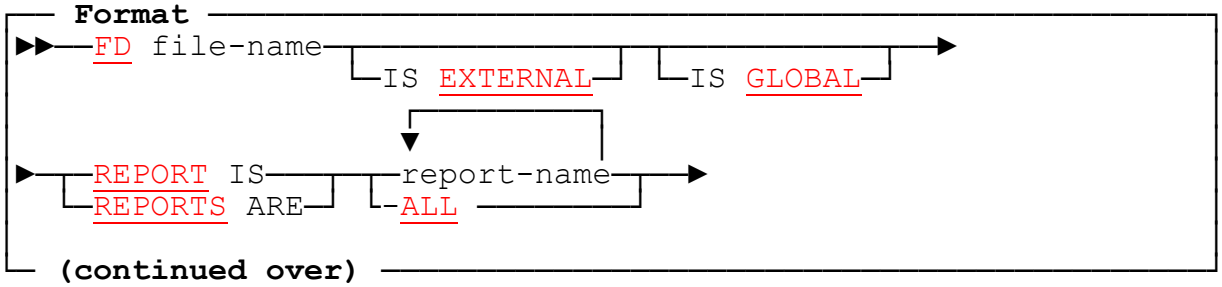

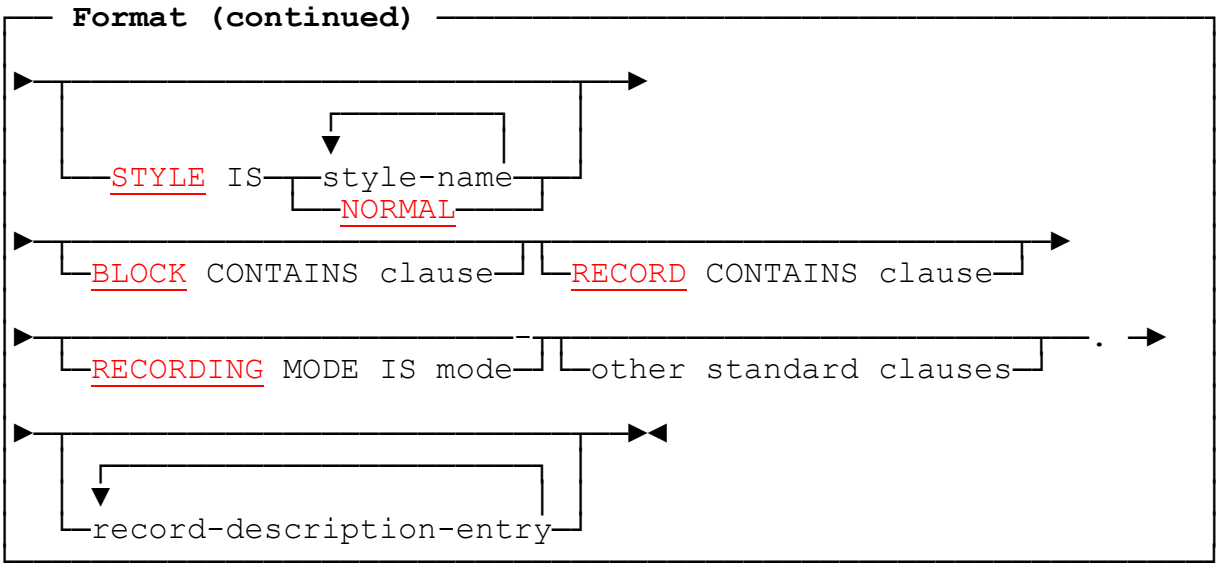


**c.** REPORT SECTION entries

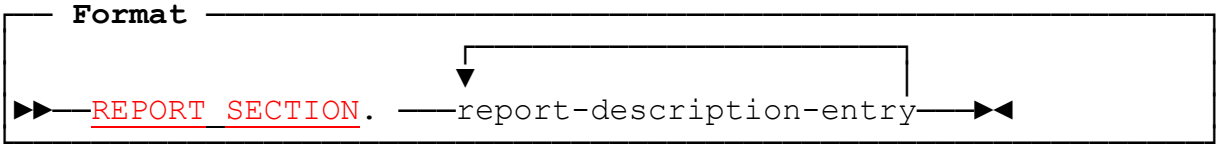


where ***report-description*** is defined as:

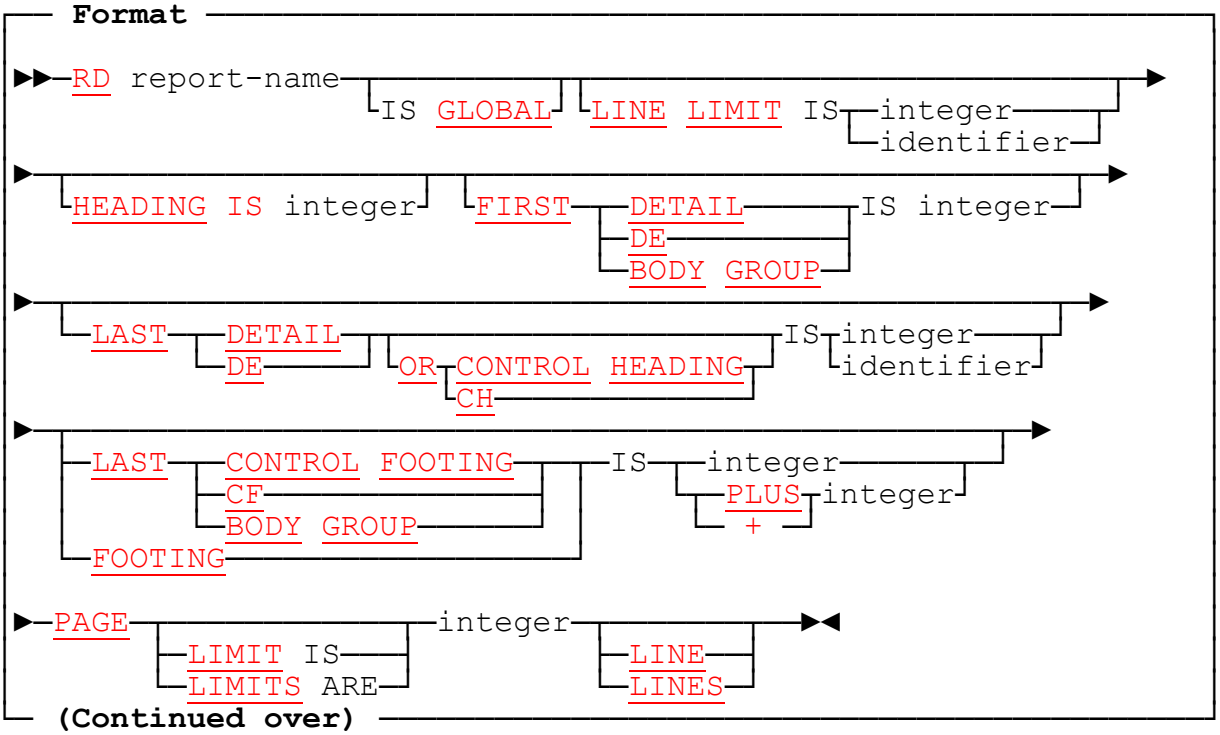

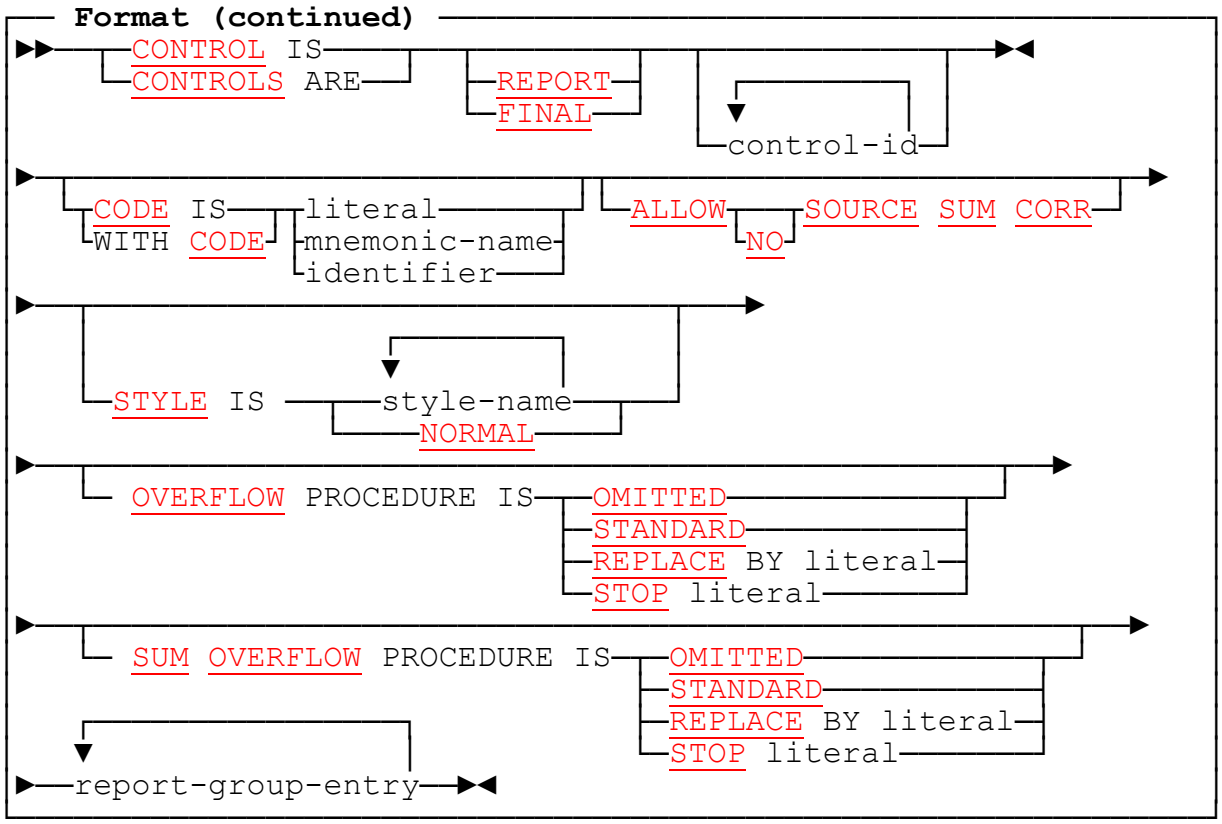


**d.** Report-Group-Entry

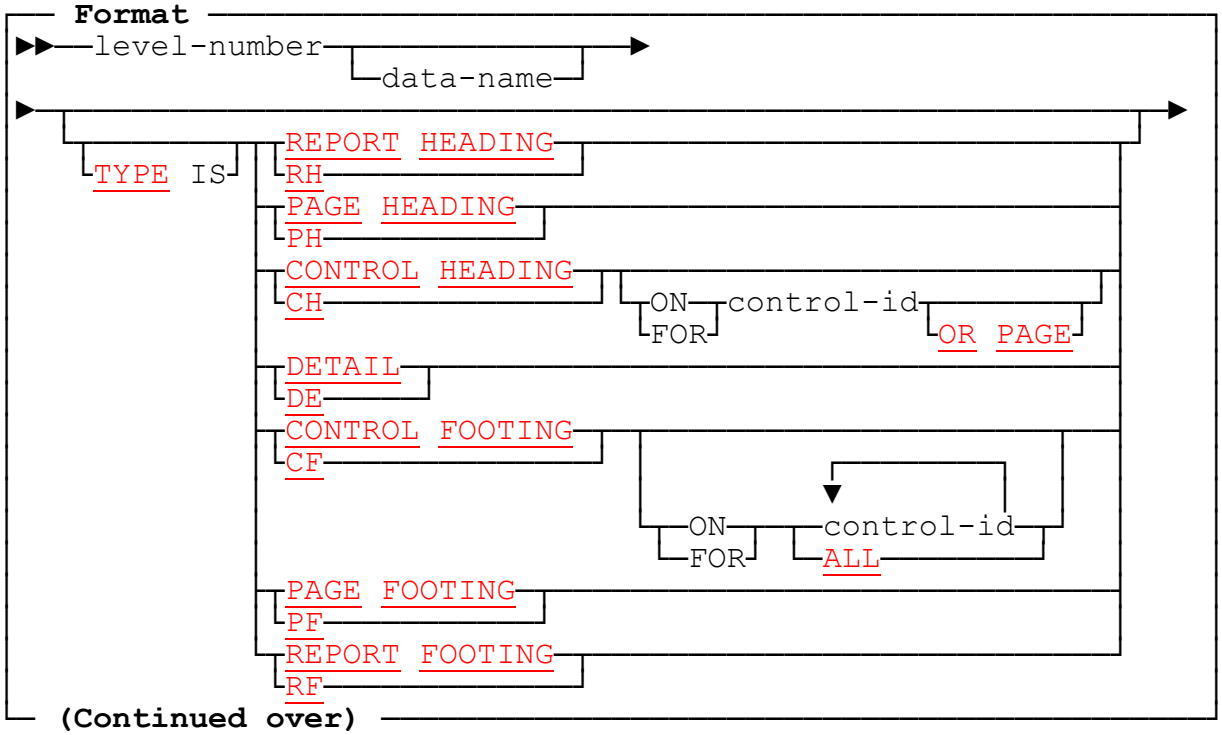

**Format (continued)**

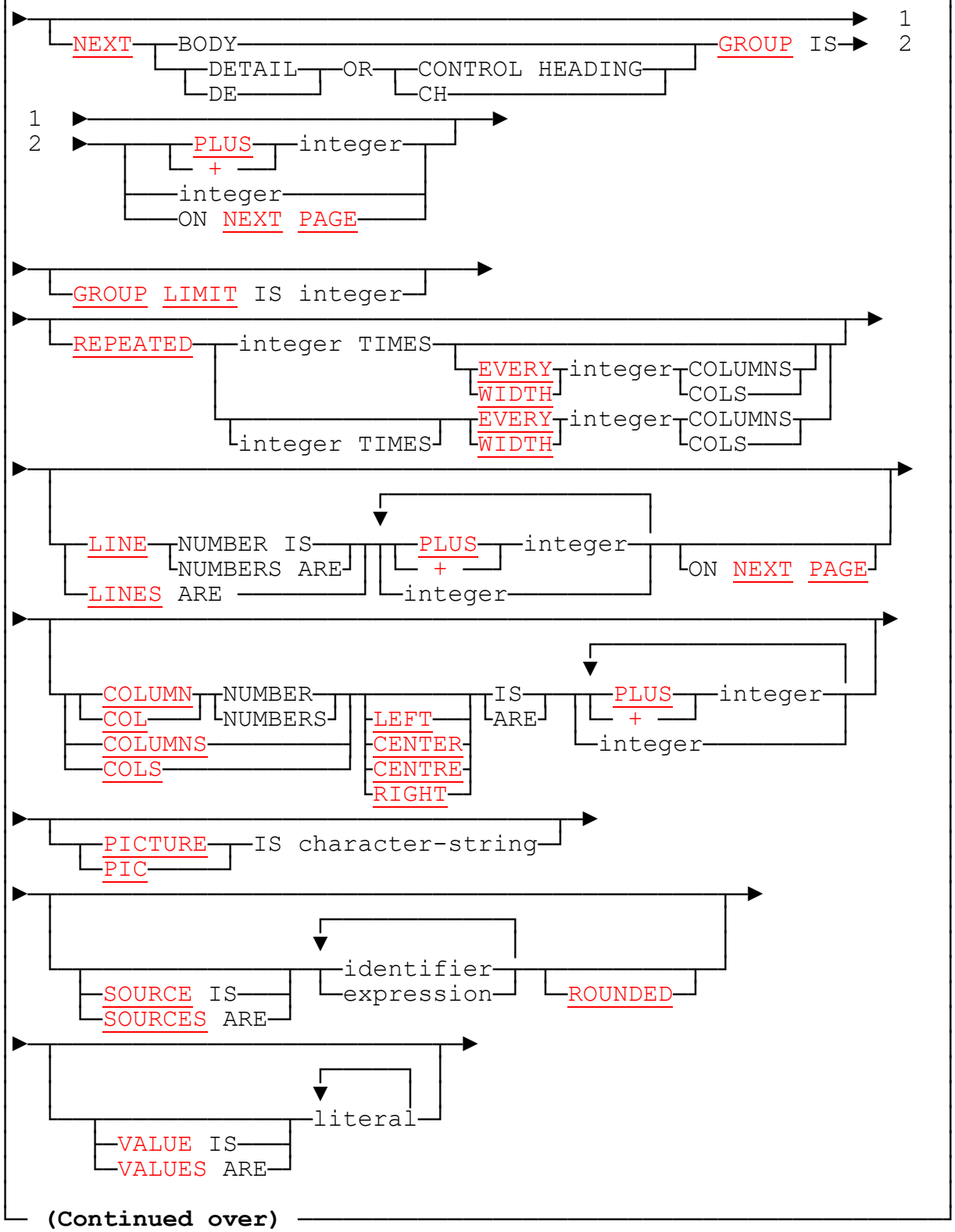


**(Continued over)**

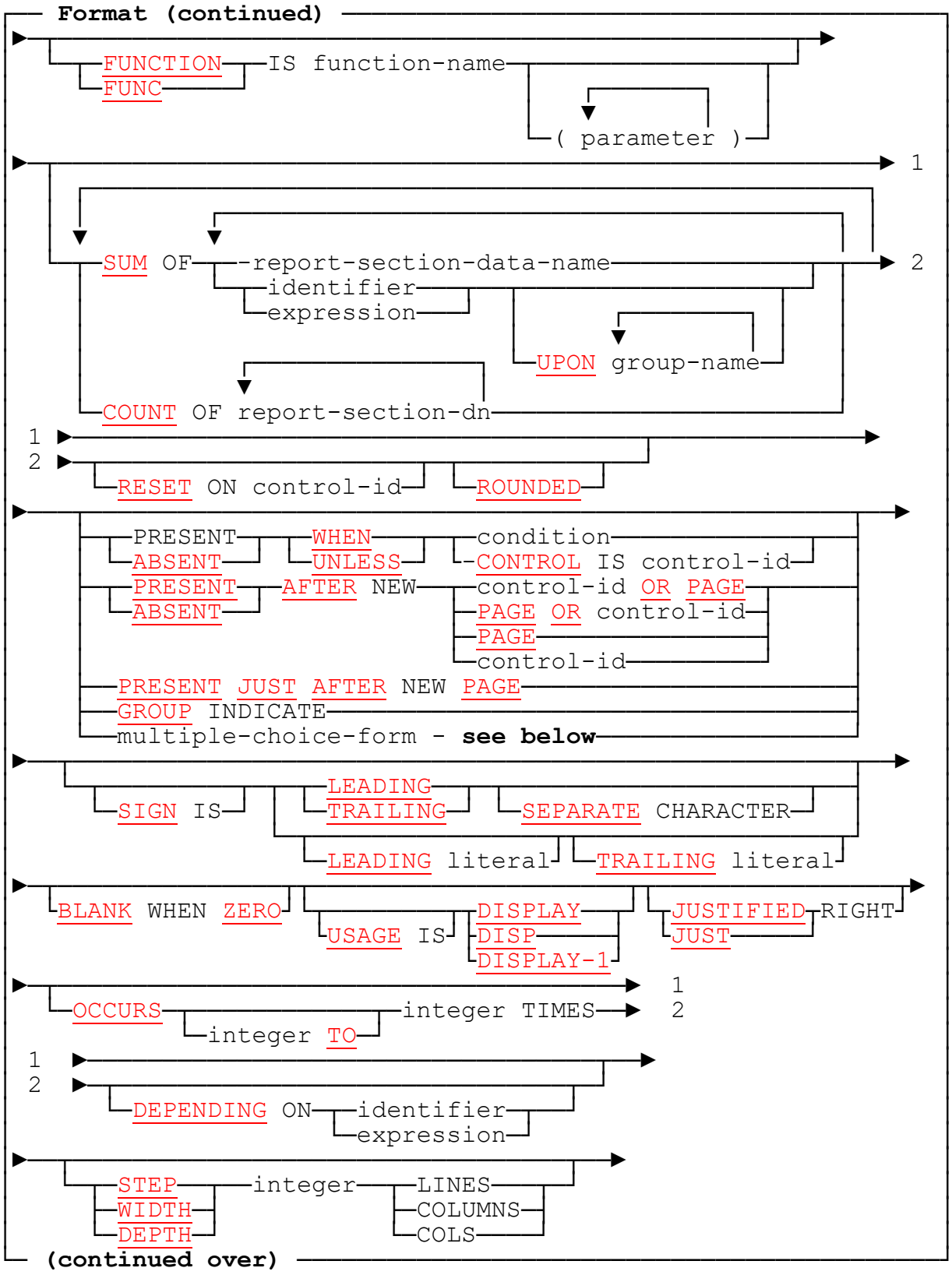
Format (continued)
FUNCTION
FUNC
IS function-name
( parameter )
1
SUM OF
report-section-data-name
identifier
expression
UPON group-name
COUNT OF report-section-dn
2
1
2
RESET ON control-id
ROUNDED
PRESENT
ABSENT
WHEN
UNLESS
condition
CONTROL IS control-id
PRESENT
ABSENT
AFTER NEW
control-id OR PAGE
PAGE OR control-id
PAGE
control-id
PRESENT JUST AFTER NEW PAGE
GROUP INDICATE
multiple-choice-form - see below
SIGN IS
LEADING
TRAILING
SEPARATE CHARACTER
LEADING literal
TRAILING literal
BLANK WHEN ZERO
USAGE IS
DISPLAY
DISP
DISPLAY-1
JUSTIFIED
JUST
RIGHT
OCCURS
integer TO
integer TIMES
1
2
1
2
DEPENDING ON
identifier
expression
STEP
WIDTH
DEPTH
integer
LINES
COLUMNS
COLS
(continued over)

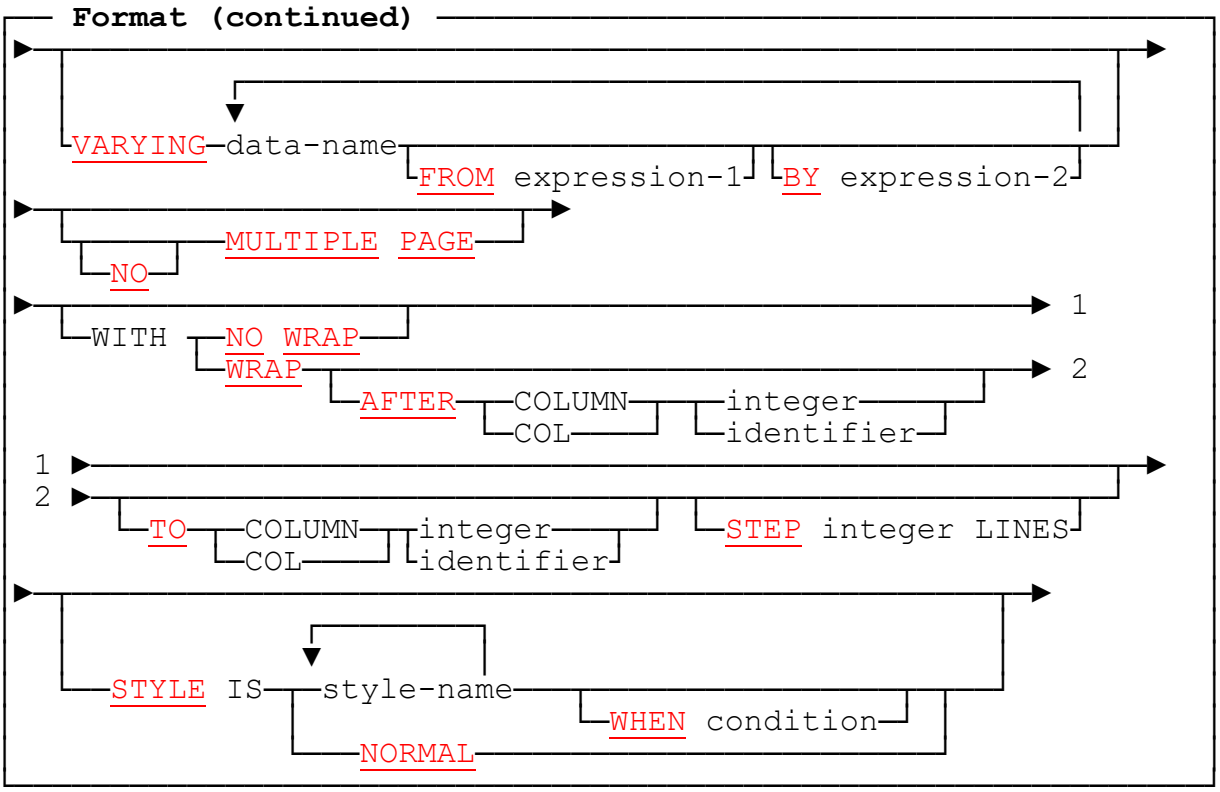


**e.** Multiple-Choice Form

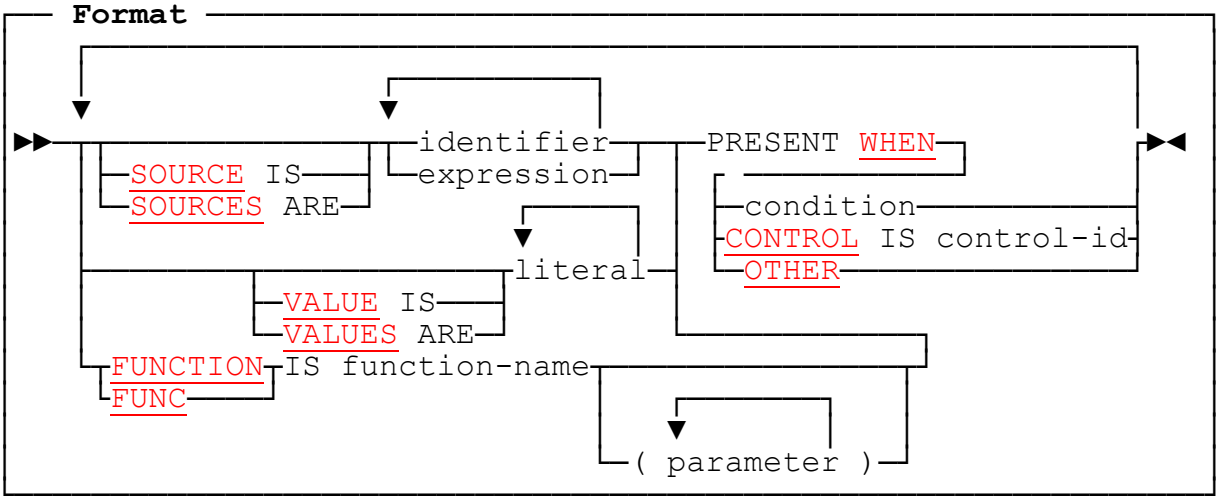


**f.** Additional PROCEDURE DIVISION statements

**Format**

**Format**

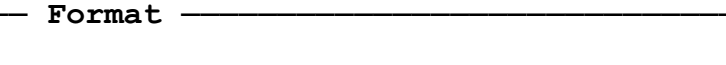


**Format**

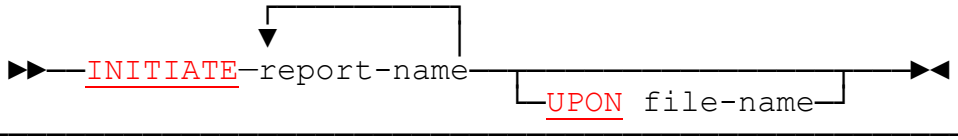


**Format**

**Format a**

**Format b**

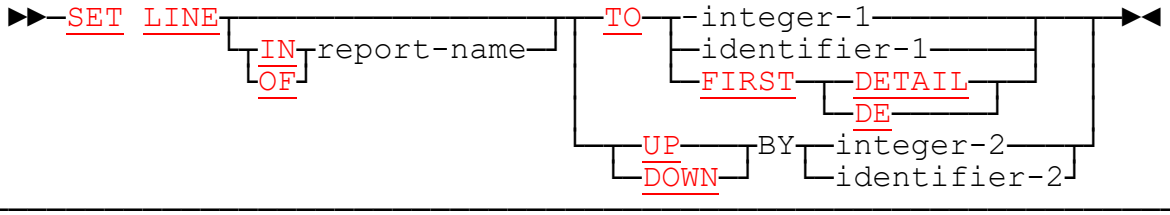


**Format c**

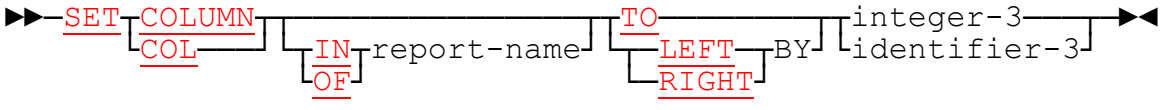

# Appendix D

## Glossary

### Absolute Positioning

This describes a LINE or COLUMN clause with an integer operand not preceded by + or PLUS. Absolute positioning places the line or field at a fixed vertical or horizontal position relative to the edge of the page.

### Axes of Summing

Four axes are possible: group of LINEs, LINE, group of COLUMNs, and COLUMN. When a field is the SUM of another REPORT SECTION field that repeats (has an OCCURS, or multiple LINES or COLUMNS), totalling may take place along any or all of these axes, depending on whether or not the SUM also repeats along the axes.

### Body Group

A CONTROL HEADING, DETAIL, or CONTROL FOOTING report group. They are so named because they appear in the "body" of the page, that is, between any PAGE HEADING and PAGE FOOTING groups that may also be present.

### CODE

A value that is passed to the output routine but does not ultimately appear in the report. It was originally meant for separating several reports written to the same spool file, but may now also be used for any control information for a basic file that is to be processed by special software downstream, or one controlled by an *Independent Report File Handler*.

### Conditional Field

A field that is qualified by a PRESENT/ABSENT WHEN/AFTER clause or an OCCURS ... DEPENDING with minimum zero, and may not therefore always appear in the report.

### Control

A field (*control field*) represented by an identifier (control identifier), defined in a SECTION other than the REPORT SECTION, whose value is tested by report writer on each GENERATE to establish whether there has been a change in value since the previous GENERATE for the report.

### Control Break

A change in the value of a control from one GENERATE to the next. Control breaks may occur at one of several levels, depending on how many controls are listed in the CONTROL clause, and their *hierarchy*, that is, the major-to-minor order in which they are listed, which is also the order of testing.

**Control Characters**

Characters which do not appear in the output as printed data but instead influence the way the data is presented. They are often referred to as *escape sequences* since Escape is frequently the first character.

**Cross-footing**

Summing from a REPORT SECTION field into another field in the same group.

**Declarative SECTION**

A SECTION, preceded by a USE [GLOBAL] BEFORE REPORTING statement, that will be executed implicitly just before a certain report group is produced.

**Dummy Report Group**

A report group that is used not for producing output, but for triggering particular features, such as a NEXT GROUP clause or a Declarative SECTION. It usually has no LINE clauses (and hence no COLUMN clauses either).

**DUPLICATED file**

A file that has a DUPLICATED clause. This defines a number of separate copies of all the report's control registers and enables several different physical reports to be produced from one Report Description.

**Entry**

An element of the DATA DIVISION of a source program beginning with a level-number (or a level-indicator like RD, FD, etc.), followed by optional clauses, and ending in a period.

**File Handler**

Short for *Independent Report File Handler* (see below).

**FINAL control**

An object of the CONTROL and TYPE clauses and the RESET phrase that describes the top-level control, which may be used to produce a CONTROL FOOTING that encompasses the whole report, such as for grand totals. It may also produce a major report-encompassing CONTROL HEADING. The alternative (preferred) name is **REPORT**.

**Form Feed**

This is used in this publication to denote the physical action when a printer skips forward to the top of a new page. On a line printer this used to be referred to as a "skip to channel 1". A form feed is used in "batch" printing to execute a page advance but an *Independent Report File Handler* may use a different method.

**Function**

A built-in or user-written subroutine that is automatically invoked when the programmer uses a FUNCTION clause. Functions may produce any special format defined by the user or supplied as standard.

**GLOBAL Report**

A report defined with a GLOBAL phrase in the RD. Such a report is available, together with its special registers and sum-counters, to any program nested within the one in which the RD is defined.

**GROUP INDICATE**

An older term, used in current ANS standards, for the simplest type of **PRESENT AFTER** clause.

**Independent Report File Handler**

A supplied or user-written subroutine that intercepts all the output from the report before it is written and handles it in its own way. It is invoked automatically when the user codes a MODE sub-clause in the SELECT...ASSIGN.

**Multiple CONTROL FOOTING**

A group headed by the clause TYPE CF FOR control-1 control-2... or CF FOR ALL. The group is then used as a CONTROL FOOTING for each (or ALL) of the controls, thus avoiding the need to code a similar report group at several levels.

**Multiple Form of Clauses**

A LINE, COLUMN, SOURCE, or VALUE clause with several operands. This enables several different LINEs or COLUMN fields to be represented in a single entry. Such a single entry may also be referred to in a single SUM clause with a great saving in program code.

**Multiple-choice Entry**

A series of SOURCE, VALUE, or FUNCTION clauses, each followed by a [PRESENT] WHEN / AFTER clause, all written in the same elementary entry. The first choice that is "present" becomes the effective value. WHEN OTHER may be used for the "catchall".

**Non-REPORT SECTION SUM**

A SUM clause referring to an identifier that is not defined in the REPORT SECTION. Adding takes place according to **SOURCE SUM correlation** or on execution of each GENERATE.

**Page Advance**

This is an automatic operation that takes place when a body group that is about to be printed cannot fit entirely on the current page. It outputs a PAGE FOOTING group (if defined), increments PAGE-COUNTER, advances to the top of a new page, and outputs a PAGE HEADING group (if defined).

**Page Buffer**

An area defined when a file is defined with a MODE clause and a WITH PAGE BUFFER clause. The Page Buffer enables report data to be displayed on the page in random order, using the SET PAGE STATUS, SET LINE, and SET COLUMN statements.

**Page-fit Test**

A test performed automatically to ensure that the whole of a body group can be fitted on the current page. If not, a page advance is executed and the whole of the body group appears on the next page.

**Precompiler**

The translation phase of the COBOL Report Writer software that converts report writer clauses and statements into procedural ("vanilla") COBOL before they are compiled.

**Relative Positioning**

This applies to a LINE or COLUMN clause with a + or PLUS before the integer. (LINE and COLUMN with no operand imply + 1 and are therefore also relative.) Relative positioning places the line or field at a distance relative to the preceding line or field.

**Report**

A report is any human-readable set of data lines produced by any program.

**Report Description**

The RD entry for a report, plus all the Report Group Descriptions that follow the RD.

**Report Description Entry**

The full name for the RD entry (**not** including the report groups that follow it).

**Report File**

A file defined by means of an FD entry that has a REPORT clause. Any of a wide range of physical realizations of report output that may be produced using report writer.

**Report Group**

A contiguous set of lines produced in one operation. Also used, informally, to mean a Report Group Description.

**Report Group Description**

The set of entries, beginning with an 01-level entry, that describe a report group.

**REPORT SECTION SUM**

A SUM clause referring to a data-name that is defined in the REPORT SECTION. The adding takes place by *rolling forward* or *cross-footing*.

**Rolling Forward**

Summing from a REPORT SECTION field into REPORT SECTION field in a **different** group, such as from a lower-level CF group into a higher-level CF. (Distinguished from *Cross-Footing*.)

**SOURCE SUM Correlation**

An option, for compatibility with ANS-68 report writer, whereby for every non-REPORT SECTION SUM operand a check is made to see in which DETAIL groups, if any, the same item is a SOURCE. Adding then takes place only for those operands whose referencing DETAIL group was GENERATEd. (In the ANS-74 and ANS-85 standards, by contrast, a GENERATE causes all non-REPORT SECTION SUM operands to be accumulated into the totals that reference them.)

**Special Register**

A location such as PAGE-COUNTER, LINE-COUNTER, and CODE-VALUE that is defined automatically by report writer, rather than by the programmer, and may be accessed, usually under special conditions, to control the production of the report.

**STYLE**

A special property given to a file, report, line or elementary field that causes it to make use of a special effect available from the output device, such as UNDERLINE, COURIER, or LANDSCAPE. STYLEs may be implemented in a number of different ways, all of them completely transparent to the programmer.

**Subtotalling**

An ANS report writer term for SUMming of a non-REPORT SECTION item.

**Sum Counter**

The ANS report writer term for total field, not used in this publication since "COUNT" now has a special significance as a clause.

**Summary Reporting**

The action that takes place when a GENERATE report-name statement is executed. CONTROL HEADING or CONTROL FOOTING groups are the only body groups that can be presented.

**Total Field**

An internal register set up implicitly for each entry that has a SUM or COUNT clause. The total field is incremented by the value indicated in the SUM operand until it is output, whereupon it is stored in the report line and reset to zero. Its PICTURE is similar to the explicit PICTURE of the same entry, but without any editing characters.

**TYPE**

This term has two meanings in report writer. The TYPE clause at the 01-level states how the report group is used in the report, for example TYPE PAGE HEADING. In the SELECT...ASSIGN clause, the TYPE clause indicates the physical device to which the output is to be sent.

**Unprintable Item**

An elementary item that has no COLUMN clause. It does not appear in the report line but may be totalled like any other item.

**Variable-length Field**

A report item that has either a "<" PICTURE symbol or a multiple-choice VALUE with no PICTURE and different-length "literals".

**Variable-position Field**

A report item whose horizontal position may be different from one appearance to the next because it contains a relative COLUMN clause and follows either a conditional or variable-length field, or another variable-position field.

# Appendix E

## Precompiler Messages

The following messages may be issued during precompilation under various circumstances. Most are self-explanatory, but an additional explanation is given below for each of them. The severity level of each message is also shown. The meanings of these are as follows:

**Severe (S)** Implies a serious violation of the rules of syntax or usage, such that the object program is not reliable - perhaps even incomplete - and should not be run.

**Error (E)** Implies a violation of the rules of syntax or usage, but such that the resultant program will be executable, although the results will not necessarily be those expected.

**Warning (W)** Implies a less severe violation of the rules, or a situation where a change to the code is preferable, although the program will execute as intended.

**Informational (I)** Is used for a confirmatory or informational message and does not imply any violation on behalf of the user.

Return codes are issued by the precompiler to indicate the most severe level of error. They are listed in *Installation and Operation*.

## Messages

| Ident.-Sev. | Message and Explanation |
|---|---|
| RW-001-I | **No Report Writer data entries were found in this program.**<br>The precompiler found no REPORT SECTION. This is not an error, as the program need not contain report writer statements. |
| RW-002-S | Clause xx not allowed in this context: ignored.<br>The given clause should not be coded in this type of entry. |
| RW-003-S | **Unrecognized item *xx: discarded*.**<br>The given word was found when a new clause keyword was expected. |
| RW-004-S | **Report Writer statements in FILE-CONTROL/FILE SECTION but no REPORT SECTION.**<br>The program contains a report writer clause in a SELECT...ASSIGN or FD entry but there is no REPORT SECTION. |
| RW-007-S | **No END DECLARATIVES found.**<br>While processing the DECLARATIVES portion, the precompiler encountered the end of the source before END DECLARATIVES. |

RW-008-I **FD has record definition but no RECORD CONTAINS: compiler may assume variable-length.**

If there is an 01-level entry following the FD for a report file, the record description generated by the precompiler may disagree with it in length, causing the compiler to assume that the file is RECORDING MODE V. If the *01*-level entry is not used in the program, it should be removed.

RW-009-E **Word *xx expected here: assumed.***

The named word is compulsory for this clause.

RW-010-E **No period after REPORT SECTION: assumed.**

REPORT SECTION should be followed by a period (".") character.

RW-011-S **RD absent or not in A-margin: assumed.**

This fault may be the consequence of a fault in the coding of the REPORT SECTION header.

RW-012-S **Clause *xx not permitted in RD statement: ignored.***

The precompiler is still scanning the RD statement but has found a clause that cannot be used there. It is likely that a period has been omitted.

RW-013-S **Clause/phrase *xx not allowed in REPORT SECTION: discarded.***

The named keyword is a recognized COBOL keyword but cannot be used in the REPORT SECTION.

RW-014-S **No report-name follows RD.**

A period or a keyword follows immediately after RD. Report writer constructs a name in order to continue scanning.

RW-015-S **This report-name has already been defined.**

Each report-name can follow only one RD.

RW-017-S **REPORT SECTION absent/misspelt: assumed.**

An RD entry has been found without a correct REPORT SECTION header preceding it.

RW-019-W **Report *xx in FD has no REPORT SECTION entry.***

A report-name has been declared in a REPORT clause of an FD but there is no RD entry for the report-name. This situation is allowed by OS/VS and DOS/VS COBOL. The superfluous report-name should be removed, together with the clause, if it is its only operand.

RW-020-S **Group item has elementary clauses: ignored.**

This message appears as a result of an illogical sequence of level-numbers. For example, you may have coded:

```
03  LINE 1   COL 20  ...
  05  COL 30 ...
```

The first COLUMN clause is at a group level, but COLUMN must always be at the elementary level. This example should be re-coded:

```
03  LINE 1.
  05  COL 20  ...
  05  COL 30  ...
```

See also Part 6.

RW-021-E **Clause *xx* *empty: ignored.***

This may be the result of using a reserved word as a data item, for example, CONTROLS ARE PAGE.

RW-022-S **Clause *xx* *cannot be repeated in entry: previous occurrence discarded.***

This normally happens as the result of a missing period.

RW-023-S **Invalid CODE Clause: ignored.**

The CODE clause is incorrect.

RW-024-S **CODE too long for record: ignored.**

The CODE value has too many characters and, taking into account the size of the longest print line (and possible carriage control character), would cause the record length implied by the RECORD CONTAINS clause to be exceeded.

RW-026-S **FINAL/REPORT control not highest: ignored.**

The keyword FINAL or REPORT, if included in the CONTROLS clause, must be the first (or only) operand.

RW-027-S **Invalid control identifier.**

This implies that an *identifier* used as a CONTROL is improperly formed.

RW-028-E **No integer after PAGE LIMIT: assuming 60.**

The *integer* was probably mistyped.

RW-029-S **PAGE LIMIT not in range 1 to 9999: assuming 60.**

The *integer* of PAGE LIMIT is not feasible.

RW-030-I **PAGE LIMIT will never be reached.**

This message is issued when there is no PAGE FOOTING and the [LAST CONTROL] FOOTING value is less than the PAGE LIMIT, or when there is a PAGE FOOTING but it does not reach the PAGE LIMIT.

RW-031-W **PAGE LIMIT increased to value of LAST DETAIL or FOOTING.**

The PAGE LIMIT must not be less than the value of LAST DETAIL or [LAST CONTROL] FOOTING. It has been adjusted up to the higher value.

RW-032-I **Length *xx* *assumed for CODE identifier.***

If the *identifier* form of the CODE clause is used, the number of characters to be assigned to the CODE is calculated by subtracting the LINE LIMIT (and the size of any carriage control character) from the record size given in the RECORD or BLOCK CONTAINS clause, rather than from the size of the *identifier*. This message confirms the calculated length.

RW-033-S **Values of PAGE sub-clauses invalid or not in sequence.**

The *integers* of the HEADING, FIRST DETAIL, LAST DETAIL, and LAST CONTROL FOOTING sub-clauses and the PAGE LIMIT should be in non-descending order.

RW-034-E **Size of CODE differs from other reports going to same file.**

This situation is tolerated but, since the CODE literal is placed at the front of each output record, the output may be difficult to interpret.

RW-036-I **Standard OS/VS code literal is normally length 1.**

However with *report writer*, CODE values may be of any length.

RW-037-S **Invalid level number: assuming *xx*.**

This usually happens as the result of other faults in the code.

RW-038-E **LINAGE not allowed with REPORT(S) clause in FD.**

The LINAGE and REPORT(S) clauses are mutually exclusive. If you are using report writer, do not code LINAGE or any of its phrases.

RW-039-E **Report has no groups.**

This is usually the result of the absence of a *01* level-number after the RD entry.

RW-041-S **First level no. after RD not 01.**

A value of *01* is assumed.

RW-042-S **Group-name not unique: name discarded.**

Each report group-name should be unique within the RD.

RW-043-S **Invalid TYPE: assuming DETAIL.**

The keyword after TYPE is not one of the standard names.

RW-044-S **Already had TYPE *xx*: *assuming DETAIL.***

Two non-body groups of the same TYPE were found in one RD.

RW-045-S **Clause *xx* *allowed only at level 01: discarded.***

The clauses TYPE, NEXT GROUP, GROUP LIMIT and REPEATED can be coded only at the *01* level.

RW-047-S **TYPE *xx* *not allowed without PAGE: assuming DETAIL.***

TYPE PH and PF are allowed only if there is a PAGE clause in the RD.

RW-049-S **Control in TYPE clause not declared: assuming DETAIL..**

TYPE CH or CF should be followed by FINAL/REPORT or the name of one of the *identifiers* listed in the CONTROL(S) clause of the RD.

RW-050-S **Already had CH/CF for this control: assuming DETAIL.**

Each *control identifier* can appear in only one CH and/or one CF group (including multiple CF's).

RW-051-W **Duplicated control: ignored.**

The same control name cannot be used twice in a CONTROL clause. (There is no restriction, however, on using the same field under a redefined name.)

RW-052-I **No TYPE: assuming DETAIL.**

The TYPE clause may be omitted, in which case DETAIL is assumed.

RW-054-E **Absolute LINE not allowed in unpaged report: PLUS form assumed.**

Without a legal PAGE clause, every LINE must be relative (LINE + or PLUS).

RW-055-S **LINE value should be non-negative integer: ignored.**

The *integer* of the LINE clause is not numeric or is negative.

RW-056-S **NEXT PAGE option of LINE in unpaged report: discarded.**

LINE [*integer*] ON NEXT PAGE is not allowed if there is no PAGE clause in the RD.

RW-058-S **PLUS not allowed with NEXT PAGE: ignored.**

The form LINE IS PLUS/+ *integer* ON NEXT PAGE is not allowed.

RW-059-E **NEXT PAGE allowed only in first line of this group.**

The LINE IS [*integer*] ON NEXT PAGE clause can only appear as the first LINE clause of a group, except in a TYPE RH or RF, or a MULTIPLE PAGE group.

RW-060-W **Integer in NEXT PAGE below heading value.**

In the LINE IS *integer* ON NEXT PAGE clause, the *integer* must not be less than the HEADING *integer* (default value 1).

RW-061-E **Absolute line follows relative line.**

This is not allowed if the first LINE of the group is relative, except in a MULTIPLE PAGE group.

RW-062-W **Line position precedes previous line.**

All absolute LINE numbers must be in strictly ascending order (taking into account possible ABSENT lines), except in a MULTIPLE PAGE group.

RW-063-S **LINE clause subordinate to another LINE: ignored.**

This condition arises when the OSVS option is not in effect and the LINE clauses in a report group are at different levels, for example:

```
01  GROUP-01  TYPE DE   LINE NEXT PAGE.
    05  COLUMN 20  ...
  03  LINE PLUS 1.
    05  COLUMN 20  ...
```

It may be rewritten as follows:

```
01  ...  TYPE DE.
  03  LINE NEXT PAGE.
        05  COLUMN 20  ...
      03  LINE PLUS 1.
        05  COLUMN 20  ...
```

This structure is accepted as written by OS/VS COBOL, DOS/VS COBOL, and by this implementation, provided the OSVS option is in effect, in which case a Warning RW-064 appears.

RW-064-W **LINE entries nested: previous LINE assumed level xx.**

See the comments under RW-063 above.

RW-066-S **COLUMN value should be positive integer < 999: ignored.**

The *integer* of the COLUMN clause is not feasible.

RW-069-W **COLUMN should be subordinate to LINE: LINE + 0 assumed.**

This message is issued when a COLUMN clause is found but there is no LINE clause containing it, for example:

```
01  TYPE IS PH.
  03  COLUMN 30 ...
```

The same message appears if the OSVS option is **not** in effect and the COLUMN clause is coded at the same level as the preceding LINE clause (or higher), for example:

```
  03  LINE 1  COLUMN 20 ...
  03  COLUMN 30 ...
```

Here, the second COLUMN clause is not subordinate to any LINE clause. A LINE PLUS ZERO clause is assumed in default. This means that an unnecessary second record will be written so that the item will be printed in the position defined by the preceding LINE. This structure should be re-coded as follows:

```
  03  LINE 1.
    05  COLUMN 20 ...
    05  COLUMN 30 ...
```

If the OSVS option is in effect, Warning message RW-070 appears instead and the additional LINE PLUS ZERO is not generated.

RW-070-W **COLUMN entries following LINE assumed to be subordinate to it.**

See under RW-069 above. See also Part 6.

RW-071-S **NEXT GROUP value should be positive integer: discarded.**

The *integer* following NEXT GROUP is not numeric or is negative or zero.

RW-072-W **Recurrence of same absolute LINE merged with preceding.**

This message may be result from the following type of construct when the option OSVS is in effect:

```
03  LINE 1  COLUMN 10 ...
03  LINE 1  COLUMN 30 ...
```

The two COLUMN entries should be brought together under a single LINE 1 entry, but OS/VS and DOS/VS COBOL allow this construct, as does the precompiler also.

RW-074-S **NEXT GROUP absolute or NEXT PAGE in unpaged report: PLUS assumed.**

The forms NEXT GROUP IS *integer* and NEXT GROUP NEXT PAGE are not allowed unless there is a PAGE clause in the RD.

RW-075-S **Invalid PICTURE: PICTURE X substituted.**

The PICTURE clause has an invalid symbol, or an invalid combination of symbols or lacks a compulsory symbol.

RW-076-S **PICTURE too long: truncated to 32 symbols.**

There is a limit of 32 characters on a PICTURE string.

RW-081-S **Invalid literal: clause or phrase ignored.**

A literal is expected here but the item found is not correct.

RW-082-S **Invalid integer: clause or phrase ignored.**

An *integer* is expected here but the item found is not correct.

RW-083-W **Hexadecimal value defined as printable text rather than by STYLE clause.**

Although hexadecimal values are allowed in the REPORT SECTION, their usual purpose is to put control characters in the print data. A more system-independent method is to use the STYLE clause.

RW-084-S **Invalid identifier or expression: clause or phrase ignored.**

An *identifier* or *expression* is expected here but the item found is not correct.

RW-085-I **New reserved word accepted as data-name.**

Clauses such as SOURCE IS STEP or SUM OF FUNC are recognized as correct even though STEP and FUNC are *report writer* keywords. This allow older code to continue to function without change.

RW-086-W **CF group refers to identifier that is not a CONTROL: after-break value may be used.**

You have specified an *identifier* in a SOURCE clause within a CONTROL FOOTING group and the *identifier* is not a CONTROL or a SUM total field. This message reminds you that only **CONTROL** items are restored to their *before-the-break* values during the processing of CONTROL FOOTING groups. If the data item referred to normally changes at control-break time, you will obtain its *after-the-break* value (unless the item is a redefinition of, or subordinate to, a CONTROL item) and this may not be what you intended. To obtain the *before-the-break* value, you could define a Declarative section for the CONTROL HEADING. If the data item does **not** change at control-break time, this message should be ignored.

RW-087-S **Control in RESET phrase not declared: discarded.**

Except for FINAL or REPORT, the *identifier* specified in the RESET phrase must be declared in the CONTROL clause.

RW-088-W **RESET at lower level than associated SUM clause.**

If SUM and RESET are used in a TYPE CF group, the control used must be at the same level or a higher level than that of this CF group.

RW-089-W **Elementary item must have data-name or SOURCE etc.**

Every elementary item should have either SOURCE, or VALUE, or SUM/COUNT, or FUNCTION clause, or should carry a data-name.

RW-090-S **LINE...NEXT PAGE not allowed in this type of group.**

It is not allowed in a TYPE PH or RH group.

RW-094-W **First LINE number will cause group to be positioned higher than top limit.**

The first LINE number of the group is such that the group will start higher (earlier) than its highest permissible position on the page.

RW-096-W **LINE clauses in group will cause it to extend beyond bottom limit.**

The last LINE number of the group is such that the group will end lower than its lowest permissible position on the page. See also Part 6.

RW-098-W **PRESENT should not precede WHEN/UNLESS if used as qualifier for previous clause.**

The WHEN phrase of the STYLE clause is not normally preceded by PRESENT. If you have written something like:

```
05  COL 1  VALUE "Payment overdue"  STYLE UNDERLINE
    PRESENT WHEN W-DATE < W-TODAY.
```

note that the *condition* immediately following the STYLE clause is assumed to qualify just the STYLE clause, so this should be re-written as:

```
05  COL 1  STYLE UNDERLINE  VALUE "Payment overdue"
    PRESENT WHEN W-DATE < W-TODAY.
```

RW-099-E **ABSENT not allowed before qualifying condition.**

The STYLE clause cannot be immediately followed by an ABSENT clause and the order of the clauses should therefore be changed.

RW-100-W **WHEN OTHER allowed only with multiple choice.**

The clause [PRESENT] WHEN OTHER cannot be used in isolation. That is, there must be at least one [PRESENT] WHEN *condition* clause in the same entry.

RW-106-W **This RH group will have own page: NEXT GROUP NEXT PAGE assumed.**

If NEXT GROUP NEXT PAGE is not used in an RH group, report writer will try to fit the group on the first page above the PH group. If that cannot be done, this message is issued.

RW-107-W **This RF group will have own page: NEXT PAGE assumed.**

If LINE...NEXT PAGE is not used in an RF group, report writer will try to fit the RF group on the last page below the PF group. If that cannot be done, this message is issued.

RW-110-I **Elementary item has no size: will not be output.**

This message occurs when the PICTURE clause is omitted from an elementary item and there is no way of telling its size, such as from a VALUE "literal" as, for example:

```
05  COLUMN 21    SOURCE IS WS-PAYMENT.
```

A PICTURE clause is always required at the elementary level **except** (a) with a simple VALUE "literal". However, OS/VS and DOS/VS COBOL allow the PICTURE to be omitted and treats the field as unprintable, so this technique was often used in the past to enable an item to be used in a SUM when it was not also being used as a SOURCE.

RW-112-W **Absolute NEXT GROUP position not beyond last line position.**

The *integer* of a NEXT GROUP *integer* clause in a TYPE RH or PF group must be greater than the last line position in the group.

RW-113-W **NEXT GROUP position out of range.**

Either the current group is a REPORT HEADING and the NEXT GROUP is beyond the FIRST DETAIL, or the current group is a PAGE FOOTING and the NEXT GROUP is beyond the PAGE LIMIT.

RW-114-W **Absolute NEXT GROUP not in range FIRST DETAIL to FOOTING.**

The *integer* of a NEXT GROUP *integer* clause in a body group must be in that range.

RW-115-S **NEXT GROUP not allowed in types PH and RF: ignored.**

To provide spacing following a Page Heading, the FIRST DETAIL clause may be used.

RW-122-S **SUM clause has nonnumeric PICTURE: ignored.**

The PICTURE clause was probably mistyped.

RW-124-S **Group-name in UPON phrase is unknown or ambiguous.**

An UPON phrase is followed by a name that is either not a group-name or requires qualification.

RW-125-E **UPON group not type DETAIL.**

It is not possible to SUM ... UPON a group that is not TYPE DETAIL. If the field is a SOURCE in the group, you may instead give a data-name to the entry and SUM that data-name.

RW-126-E **Rolling forward of SUM from higher to lower CF group not allowed.**

An attempt is being made to SUM a field in a higher CONTROL FOOTING and print the total in a lower CONTROL FOOTING.

RW-127-E **Report-name qualifier required: IN *xx assumed.***

The same group-name is in use in more than one report. The name in the first report is arbitrarily chosen.

RW-128-S **Qualifying report-name invalid.**

The only qualifier accepted following a sum counter, group-name or special register is the report-name itself.

RW-131-S **Name following GENERATE not report or detail group.**

The name following GENERATE is probably misspelt.

RW-132-S **Name following INITIATE/TERMINATE not report: ignored.**

The name following INITIATE or TERMINATE is probably misspelt.

RW-133-E **Cannot do summary reporting without CONTROLS clause.**

This may be issued if GENERATE report-name is coded erroneously instead of GENERATE detail-name.

RW-134-S **SUPPRESS allowed only in DECLARATIVES: ignored.**

A SUPPRESS keyword has been found outside the DECLARATIVES part of the program.

RW-135-S **Invalid operand after USE BEFORE REPORTING: section discarded.**

The directive USE BEFORE REPORTING must be followed by the name of a report group.

RW-136-S ***"xx".. not allowed in Report Writer DECLARATIVES.***

This is issued if an INITIATE, GENERATE, or TERMINATE is found in the DECLARATIVES part of the program.

RW-137-E **Report Writer verb has no operands: ignored.**

The verb INITIATE, GENERATE, or TERMINATE is followed immediately by a period, another verb, or the end of the source.

RW-138-S **Group already has DECLARATIVES section.**

There can only be one DECLARATIVES section for any given report group.

RW-139-W **USE AFTER EXCEPTION/ERROR DECLARATIVE not used by file-handler.**

Independent Report File Handlers cannot access the USE AFTER EXCEPTION or USE AFTER ERROR DECLARATIVE section for the file they control. This message warns that the section will have no effect. A FILE STATUS should be created and tested after each operation instead.

RW-142-W **No INITIATE statement found for this report.**

Check that INITIALIZE was not coded by mistake instead of INITIATE. This message and the next are issued only if there is a GENERATE statement referring to the report.

RW-143-W **No TERMINATE statement found for this report.**

See notes under RW-142 above.

RW-144-W **MODE more than 4 characters: excess ignored.**

Report writer generates the name CRFHxxxx for the name of the *Independent Report File Handler*, so 4 is the limit.

RW-145-E **MODE not allowed where record descriptions follow FD: discarded.**

A report file that is written using an *Independent Report File Handler* cannot process any records other than those implicitly defined in the REPORT SECTION. If the (01-level) record description is not referred to (via a WRITE statement) anywhere in the program, it should be omitted. Otherwise, a way should be found to write the record by means of additional code in the REPORT SECTION. The file handler itself may also be enhanced to write special records to the print file.

RW-146-I **No GENERATE issued for this DETAIL.**

There is no GENERATE statement in the PROCEDURE DIVISION referring to this DETAIL group-name.

RW-148-S **Invalid UPON file-name.**

The file-name specified in the INITIATE...UPON is not defined in the FILE SECTION or it is not a report file or its REPORT(S) clause does not include the report-name (or one of the report-names) given in the INITIATE.

RW-149-E **Report assigned to more than one FD: file handler DUPL required.**

OS/VS and DOS/VS COBOL allowed a report-name to be defined in the REPORT(S) clause of up to **two** FD's. This property is now emulated using the **DUPL** file handler. You should code **MODE DUPL** in the SELECT ... ASSIGN statement for both files, or use the precompiler's *FMODE* option.

RW-151-W **Superfluous period: ignored.**

This message will appear if an excess period appears between the level-number and the last clause in the entry, for example:

```
05  COLUMN 21.  PIC Z(5)9.  SOURCE IS WS-INCOME.
```

RW-152-E **Period missing: assumed.**

This message will appear if no period appears at the end of an entry before the next level-number or heading. Occasionally, this may be the result of coding a superfluous numeric literal that is wrongly assumed to be a new level-number.

RW-161-I **SUM will be totalled UPON generation of *xx due to SOURCE SUM correlation.***

In an original report writer program that has more than one DETAIL group, this message should be expected for **every** SUM operand which is **not** the name of another REPORT SECTION item. This message confirms that SOURCE SUM correlation is in effect (one of the supplied defaults which is essential when an original OS/VS or DOS/VS COBOL source is processed). Report writer has searched the SOURCE clauses in all the DETAIL groups for the same *identifier* as that specified in the SUM clause and has found it in DETAIL *xx* . It will perform the adding when, and only when, DETAIL *xx*. is GENERATEd. This message tells you exactly when adding of the SUM operand takes place.

RW-162-I **SUM will be totalled also UPON generation of xx.**

This is used in combination with message RW-161. It indicates that the SUM operand was found in more than one DETAIL group. Adding will take place when **either** the DETAIL named in message RW-161-I **or** the DETAIL named in this message is GENERATEd.

RW-163-W **Item not in REPORT SECTION is accumulated on every GENERATE.**

The SUM clause referenced has an *identifier* from a SECTION other than REPORT SECTION, there are more than one DETAIL groups and either there is no SOURCE SUM correlation or the same *identifier* does not appear as a SOURCE in any DETAIL of the report. This message reminds you that adding will take place on the execution of a GENERATE for **any** DETAIL in the same report, in accordance with the ANS-85 standard. This message should not appear for any program written originally for *OS/VS* or *DOS/VS COBOL*, as the previous compiler would not have generated any adding for the SUM entry in these circumstances and a zero value should have resulted.

RW-165-W **Sum counter may be accumulated without being cleared.**

There is a RESET phrase for a total field that is also used for *rolling forward* to another SUM. Some values will therefore be rolled forward several times into the same total, which is therefore suspect.

RW-166-W **UPON phrase not allowed with SUM of Report Section entry.**

It is not permissible to use the UPON phrase if the item added is a REPORT SECTION data-name. REPORT SECTION items are added in whenever their group is produced.

RW-167-S **REPORT SECTION entry referred to by SUM must be numeric.**

Only a numeric entry may be the object of a SUM. However, a COUNT clause may be used to count the occurrences of any entry.

RW-168-S **RESET without SUM or COUNT clause: discarded.**

The RESET phrase has no meaning except in conjunction with a SUM or COUNT clause.

RW-171-S **Invalid SIGN clause: discarded.**

The SIGN clause is malformed.

RW-172-S **BLANK WHEN ZERO not applicable: discarded.**

BLANK WHEN ZERO can only be associated with numeric items.

RW-173-E **Entry contains both DBCS and non-DBCS fields.**

If the entry has a multiple VALUE clause, either all the literals must be DBCS or all must be non-DBCS.

RW-174-E **DISPLAY-1 group must contain only DBCS fields.**

If DISPLAY-1 is coded on a group level, every subordinate entry must be DBCS, that is, it must have a DBCS PICTURE ("G" symbol) or a DBCS literal VALUE, or both.

RW-180-E **CODE not allowed in RD where a record description follows FD.**

The report associated with this file has a CODE clause, but the FD is followed by an 01-level record description. Since all the records written to the file should have the additional "CODE" characters attached, it is not permissible to WRITE records independently of report writer. If the 01-level record description is not referred to, it should be deleted.

RW-181-E **PAGE BUFFER/DUPLICATED not allowed in RD whose FD has a record description.**

The PAGE BUFFER and DUPLICATED clauses imply a special organization of the report file or its records and it is not permissible to WRITE records independently of report writer. If the 01-level record description is not referred to, it should be deleted.

RW-184-W **Some SELECT clauses will be ignored by file handler and may be invalid.**

The MODE clause causes the report to be output using an *Independent Report File Handler*. The phrases RESERVE *integer* AREA(S), PADDING CHARACTER, RECORD DELIMITER, and PASSWORD of the SELECT...ASSIGN clause are not processed by the file handler and are treated as documentary only.

RW-185-W **Some FD clauses will be ignored by file handler and may be invalid.**

The MODE clause causes the report to be output using an *Independent Report File Handler*. The FD phrases CODE-SET, RECORD IS VARYING..., BLOCK CONTAINS *integer* RECORDS, LABEL RECORD(S) IS/ARE data-name, and VALUE OF... are not processed by the file handler and are treated as documentary only.

RW-190-E ***"xx" does not conform to chosen language level.***

The precompiler has been installed to accept only a subset of the available language and the specified item is not in that subset.

RW-191 ***"xx": nonconforming nonstandard, yy extension to ANS/ISO 1985 Report Writer module.***

This message appears as a result of the FIPS option to flag nonstandard IBM and SPC extensions to the current standard.

RW-192 ***"xx": nonconforming standard, ANS/ISO 1985 Report Writer module.***

This message appears as a result of the FIPS option to flag standard elements above a specified level.

RW-193 ***"xx": obsolete element in ANS/ISO 1985 Report Writer module.***

This message appears as a result of the FIPS option to flag all obsolete elements.

RW-200-I **MODE PRNT has been assumed for file due to CODE clause.**

If a file has more than one report whose RD's do not all have a CODE of equal length, the file can only be processed by an *Independent Report File Handler*. The file is therefore treated as though **MODE PRNT** had been coded.

RW-201-I **Scanning to next recognizable period or keyword.**

This message is issued after a more serious error to document the precompiler's error-recovery processing.

RW-202-W **No associated FD: MODE PRNT assumed.**

Each RD's report-name must appear in the REPORT clause of an FD as well as in the RD. The precompiler supplies a file by default and, for simplicity, implements it via the PRNT file handler.

RW-203-E **REPORT SECTION nest level must not exceed 23.**

This is the limit to the number of different levels of nesting allowed using level-numbers in the REPORT SECTION.

RW-204-I **Data-name accessible in REPORT SECTION only.**

This message is issued when an entry has a data-name that the precompiler cannot retain when generating the intermediate data description. Possible reasons for this are: (a) the LINE is subject to an OCCURS clause and, as lines are generated only once, the dimensions of the data-name would be insufficient; (b) the item has a PICTURE clause with an "<" symbol and this would be incomprehensible to basic COBOL.

RW-206-S **PLUS integer allowed only with FOOTING: ignored.**

The HEADING, FIRST DETAIL and LAST DETAIL clauses have no *PLUS integer* form.

RW-208-S **OCCURS clause not allowed at level 01.**

Perhaps a REPEATED clause was intended. This is used at level *01* to print several body groups across the page.

RW-210-S **LINE LIMIT invalid: clause ignored.**

The LINE LIMIT clause is malformed.

RW-211-S **LINE LIMIT too high for record/CODE.**

The LINE LIMIT exceeds the maximum number of bytes available in the print line, taking into account an existing CODE.

RW-212-E **CODE identifier form not allowed without LINE LIMIT.**

If the *identifier* form of the CODE clause is used, a LINE LIMIT clause must be present.

RW-213-I **Value *xx assumed for LINE LIMIT.***

This message is always issued if there is no LINE LIMIT clause in an RD. It gives the rightmost value allowed for any COLUMN and enables report writer to ensure that none of your print lines will be truncated because they are wider than one printer's width. This default value is calculated from the RECORD CONTAINS or BLOCK CONTAINS clause in the corresponding FD (allowing for the carriage control character), or, failing that from the installed default (see *Installation and Operation*). It should be checked to ensure that the value is as expected. (See *LINE LIMIT clause*.)

RW-214-I **SOURCE/SUM will show same value in each repetition.**

An OCCURS clause or multiple LINES or COLUMNS clause is in effect but the same SOURCE or SUM value will be placed in each occurrence because there are no subscripts to be varied, or there are subscripts but no VARYING clause.

RW-215-S **More than one unconditional SOURCE etc.: previous discarded.**

More than one SOURCE, VALUE clause, etc. has been found and there are no associated [PRESENT] WHEN *condition* clauses to indicate a *multiple-choice* entry.

RW-216-S **Condition has unpaired left parenthesis or reserved word.**

A major keyword, or a period, or the end of the source was found before the expected closing parenthesis (")") while scanning a *condition*.

RW-218-S **Item *xx found out of context and ignored.***

The given item was not expected in this context.

RW-220-S **Illegal OCCURS integer: clause discarded.**

An *integer* of this OCCURS clause was non-numeric.

RW-221-S **OCCURS...TO maximum must exceed minimum: TO phrase discarded.**

The second *integer* in an OCCURS...TO clause must be greater than the first *integer*.

RW-222-S **Minimum OCCURS integer negative: clause ignored.**

The first *integer* in an OCCURS...TO clause must be zero or greater than zero.

RW-223-S **OCCURS integer must be positive: clause discarded.**

The *integer* in a basic OCCURS clause or the second *integer* in an OCCURS...TO clause should be greater than zero.

RW-224-S **Invalid identifier/expression in DEPENDING ON: phrase discarded.**

This may be due to the use of a SUM or COUNT term in the expression.

RW-225-S **OCCURS...TO format allowed only with DEPENDING.**

A DEPENDING ON... phrase was expected following the OCCURS...TO clause. The first *integer* is discarded.

RW-226-S **Depth of repetition exceeds 4: clause discarded.**

Only up to four nested levels of OCCURS or multiple LINES or COLUMNS are allowed.

RW-229-S **More than 8 levels of OCCURS or PRESENT etc.**

Only up to eight levels of PRESENT WHEN, PRESENT AFTER, or GROUP INDICATE clauses, or repetition are allowed, including up to 4 levels of nested OCCURS, multiple LINES, or multiple COLUMNS.

RW-230-S **Invalid FUNCTION: clause ignored.**

This is issued if the function name is malformed.

RW-231-E **No closing parenthesis in FUNCTION: assumed.**

A major keyword, or period, or end of source was found before the closing parenthesis following the parameters to a FUNCTION clause.

RW-232-S **Summed REPORT SECTION item must have SOURCE, SUM or VALUE.**

A SUM was found of a REPORT SECTION item, but the item has no SOURCE, SUM, or VALUE clause.

RW-233-S **Misuse of < symbol in PICTURE: ignored.**

The "<" symbol may only be used immediately preceding a PICTURE symbol representing "data" as opposed to an insertion character.

RW-235-E **Report has > 1 CONTROL, so control-id must be specified in TYPE CH.**

TYPE CH must be followed by one of the *identifiers* (or REPORT / FINAL) listed in the CONTROL(S) clause.

RW-236-S **GROUP INDICATE/PRESENT AFTER not allowed in RH or RF groups.**

A TYPE REPORT HEADING or REPORT FOOTING group cannot have a GROUP INDICATE clause or a PRESENT AFTER... clause.

RW-237-S **Undeclared control in GROUP INDICATE/PRESENT AFTER: discarded.**

All control names must first be declared in a CONTROL clause.

RW-238-S **Invalid GROUP INDICATE syntax: default format assumed.**

The ON/FOR phrase is incomprehensible, so the simple (no-operand) GROUP INDICATE format is assumed.

RW-239-S **PAGE option used in unpaged report: PAGE discarded.**

There is no (valid) PAGE clause in the RD and hence none of the options using the keyword PAGE can be used.

RW-240-S **REPEATED invalid in dummy or multiple-page group.**

A group with a REPEATED clause must have at least one LINE and must not have a MULTIPLE PAGE clause.

RW-241-S **Invalid REPEATED syntax: clause ignored.**

The REPEATED clause is malformed.

RW-242-S **Too many repeats for available LINE LIMIT.**

The LINE LIMIT cannot accommodate the number of repetitions given in the TIMES phrase. If an EVERY/WIDTH phrase is given, the spacing given is too wide, or, if not, the desired number of repetitions cannot fit, even at the closest possible spacing.

RW-243-S **REPEATED allowed only in body groups: clause ignored.**

The REPEATED clause can be used only in a TYPE CH, DE, or CF group.

RW-244-S **REPEATED must have EVERY or TIMES: ignored.**

Either the TIMES phrase or the EVERY/WIDTH phrase or both must be present in the REPEATED clause.

RW-245-E **Repeats of this group will overlap.**

Running the program will result in encroachment between successive side-by-side groups with unpredictable results.

RW-246-S **Invalid condition: clause ignored.**

The *condition* following a PRESENT/ABSENT clause was syntactically invalid.

RW-247-E **Superfluous PRESENT/GROUP INDICATE/ERROR found: discarded.**

This fault is usually the result of a missing period.

RW-248-E **GROUP IND./PRESENT AFTER cannot be part of multiple choice.**

The only conditional clauses allowed in a multiple choice entry must be of the form [PRESENT] WHEN *condition*.

RW-249-E **GROUP IND./PRESENT AFTER in CONTROL group must refer to higher level.**

If a PRESENT AFTER control [OR PAGE] clause is written in a CH or CF group, the control referred to must be at a higher level than that of the group.

RW-250-W **Item overlaps or is to left of item in same line.**

This message is issued if two unconditional horizontal items overlap or if their COLUMN numbers are not in ascending sequence. It will also appear in cases where a conditional item could overlap an unconditional one. The item will be accepted as defined. If it does not overlap any of the column positions of a previous field in the line, there will be no problem at run time. Otherwise, the earlier field will be overlaid, in whole or in part, by the new item.

RW-251-I **Column overlap may occur in this line.**

This message is issued if some of the items in the report line have PRESENT WHEN clauses without which they would overlap. The precompiler assumes that the programmer has taken action to ensure that the *conditions* are mutually exclusive.

RW-253-I **Final COLUMN position may exceed line limit.**

This message is issued if some of the items in the report line have PRESENT WHEN clauses without which they would exceed the size of the line.

RW-254-E **Abs. line follows relative with no unconditional abs. lines.**

An absolute LINE clause (no +) cannot follow a relative LINE (with +) unless there is an unconditional absolute LINE earlier in the group.

RW-255-E **REPEATED absolute group must have at least 1 unconditional LINE.**

It is not possible for all the LINE entries in a group with a REPEATED clause to have a PRESENT/ABSENT/GROUP INDICATE clause, unless they are all relative (with PLUS or +).

RW-256-S **Nonnumeric SOURCE or non-REPORT SECTION SUM cannot be ROUNDED.**

ROUNDED can only be used with (a) a numeric SOURCE or (b) a SUM clause that refers to another REPORT SECTION item.

RW-257-S **Final column position in line exceeds limit.**

The rightmost column of this line exceeds the value of LINE LIMIT. The line will be truncated.

RW-258-E **Line overlap: LINE PLUS 1 assumed.**

This message will be issued if two unconditional absolute lines overlap. It will also appear in cases where a conditional absolute line could overlap an unconditional one.

RW-259-I **Line overlap may occur in this group.**

This message is issued if some of the lines in the group have PRESENT WHEN clauses without which they would overlap. The precompiler assumes that the programmer has taken care to ensure that the *conditions* are mutually exclusive.

RW-260-I **This group may extend beyond lower limit.**

This message is issued if some of the lines in the group have PRESENT WHEN clauses, which, if all present, would exceed the maximum size of the group as defined in the PAGE LIMIT sub-clauses or the GROUP LIMIT clause.

RW-261-S **Circular reference of sum totals: no summing.**

This message is issued if circular combinations of *cross-foot* SUM's are used, such as:

```
        A SUM A
or      A SUM B --- B SUM A
or      A SUM B --- B SUM C --- C SUM A etc.
```

RW-262-E **Number of occurrences of addend and SUM field differ at level xx.**

This message is issued in the following case: a SUM clause is subject to repetition (OCCURS or multiple LINES / COLUMNS); an item referred to in the SUM clause is a REPORT SECTION item that also has repetition. After matching the axis of each repetition (LINE against LINE, COLUMN against COLUMN, group of LINES against group of LINES and group of COLUMNS against group of COLUMNS), it is found that the numbers of occurrences along the matching axis are not the same.

RW-263-S **Repetition affecting SUM field has no equivalent for summand.**

This message is issued when a SUM clause has repetition (OCCURS clause or multiple LINES / COLUMNS) and an item referred to in the SUM clause is a REPORT SECTION item but has no repetition along the axis of repetition of the SUM. Briefly: a multiple SUM cannot be manufactured from a single original value.

RW-265-W **UPON phrase required in running total in type DETAIL.**

This message is issued if a SUM clause is found in a DETAIL group and the item summed is not in the REPORT SECTION. The precompiler cannot ascertain when adding is to take place unless an UPON phrase is included.

RW-266-E **Rolling forward not allowed between these types.**

It is not permitted to *roll forward* into a REPORT HEADING group or from a REPORT FOOTING group.

RW-267-S **No subscripts allowed on SUM of REPORT SECTION entry.**

The SUM *identifier* must be without subscripts when it refers to an entry in the REPORT SECTION.

RW-270-S **SUM OVERFLOW clause is invalid: discarded.**

The SUM OVERFLOW clause is malformed.

RW-274-S **Leftmost COLUMN position less than one: COLUMN PLUS 1 assumed.**

This message is associated with the RIGHT and CENTER forms of the COLUMN clause.

RW-275-S **Invalid MODE clause: discarded.**

The MODE clause is malformed. (The mode name should not be in quotes or apostrophes.)

RW-276-S **Invalid or duplicated phrase after MODE: discarded.**

One of the phrases or clauses USING, WITH PAGE BUFFER, or DUPLICATED is either malformed or occurs more than once.

RW-277-S **Invalid DUPLICATED integer: phrase discarded.**

No valid *integer* follows the DUPLICATED keyword.

RW-278-I ***MODE xx has been assumed for file due to clauses in FILE-CONTROL entry.***

To implement certain features, such as PAGE BUFFER and DUPLICATED, the independent report file handler protocol is required, rather than direct "WRITEs". If there is not already a MODE clause, report writer handles the file as though a MODE clause had been coded.

RW-281-S **SET statement has invalid syntax: discarded.**

The SET PAGE/LINE/COLUMN statement is malformed.

RW-282-S **SET statement not allowed with report that has no page buffer.**

The SET PAGE/LINE/COLUMN statement cannot be used unless the corresponding SELECT...ASSIGN clause has a WITH PAGE BUFFER clause.

RW-283-S **Integer of SET statement is out of range.**

An attempt is being made to SET the LINE or COLUMN outside the dimensions of the page.

RW-287-E **RESET not allowed in multiple CF group.**

RESET cannot be used with a SUM or COUNT clause in a multiple CONTROL FOOTING because several levels of totalling are implied.

RW-288-I **TYPE CF with no operands assumed to be multiple CF for all controls.**

If TYPE CONTROL FOOTING is coded with no control-id operand following, it is taken to mean CONTROL FOOTING FOR ALL.

RW-290-E **Mis-use of CONTROL IS control-id condition.**

The special condition **CONTROL IS control-id** can only be used in a **multiple** TYPE CONTROL FOOTING that has that control-id as one of its operands.

RW-291-W **UPON phrase refers to current group.**

The operand used in the UPON phrase should refer to the name of a different group.

RW-293-W **SUM of item with GROUP INDICATE/PRESENT AFTER may be incorrect.**

If the item quoted in the SUM clause is subject to one of these clauses, it cannot be reliably totalled, since report writer will, on principle, not total fields that ordinarily will not be Present.

RW-294-W **Summed REPORT SECTION name *xx is ambiguous: first occurrence used.***

Either (a) the given data-name, the operand of a SUM clause, is either defined in more than one place within the current report (in which case the names should be made different) or (b) the given data-name is **not** defined in the same report but **is** defined in more than one different report (in which case report-name qualifiers should be used).

RW-295-I **Maximum number of repetitions will be *xx*.**

In the absence of a TIMES phrase, report writer has calculated from the rest of the EVERY/WIDTH phrase of the REPEATED clause and the LINE LIMIT that this many repetitions of the group can be arranged side-by-side.

RW-296-I **Distance between REPEATED groups assumed to be *xx COLUMNS*.**

In the absence of an EVERY/WIDTH phrase, report writer has calculated from the TIMES phrase and the LINE LIMIT that the distance between corresponding repetitions will be that many columns.

RW-297-W **Absolute LINEs subject to REPEATED or WRAP cannot all be conditional.**

For the REPEATED or WRAP clause to work correctly, report writer must know at precompilation time whether the group will be absolute or relative. If all the absolute LINE clauses have a condition *attached*, this cannot be done.

RW-301-W **Multiple LINE or COLUMN should not be blank.**

An entry containing a LINE clause with more than one operand should be followed by at least one subordinate COLUMN entry. An entry containing a COLUMN clause with more than one operand should also contain a SOURCE, SUM, VALUE, or FUNCTION clause.

RW-302-S **Number of SOURCE items etc. does not match number of repetitions.**

With a multiple SOURCE or VALUE, there must be an equal number of repetitions either as an OCCURS or as a multiple LINES or COLUMNS clause.

RW-303-S **OCCURS not allowed in entry with multiple LINE/COLUMN.**

It is not permissible to combine an OCCURS and a LINE or COLUMN with multiple operands in the same entry.

RW-304-S **STEP/WIDTH/DEPTH allowed only with OCCURS.**

The STEP/WIDTH/DEPTH clause cannot be coded unless there is a valid OCCURS clause in the same entry.

RW-305-E **STEP/WIDTH/DEPTH not allowed in blank item.**

The STEP/WIDTH/DEPTH clause is not allowed in an elementary entry that has no COLUMN clause (actual or implied).

RW-306-S **STEP/WIDTH/DEPTH less than size of field: *xx assumed.***

The distance given in the STEP/WIDTH/DEPTH clause must be at least the size (horizontal or vertical) of the item it applies to.

RW-307-W **Wrong axis implied by STEP/WIDTH/DEPTH.**

The keyword LINES may only be used in the vertical direction and COLUMNS in the horizontal direction.

RW-308-W **Scope of OCCURS includes absolute entry: minimum STEP (*xx*) *assumed.***

An OCCURS clause includes within its scope an absolute entry (LINE or COLUMN without "+"). The value given is the minimum distance that may be assumed between adjacent entries.

RW-309-S **Mult. SOURCE/VALUE not subject to fixed OCCURS or mult. LINE/ COLUMN.**

A multiple SOURCE or VALUE clause must be associated with either OCCURS without DEPENDING or a multiple LINES or a multiple COLUMNS.

RW-310-E **SOURCE NONE allowed only in multiple entry.**

SOURCE NONE can be used only as part of a multiple-operand SOURCE clause.

RW-311-S **Multiple LINE numbers must increase: PLUS 1 assumed as necessary.**

In a multiple LINES clause, absolute line numbers must be strictly increasing.

RW-313-E **REPORTS ALL already encountered: ignored.**

REPORTS ARE ALL can only be coded once per program.

RW-314-W **ALL should be only REPORT(S) operand: will be applied to unassigned reports.**

REPORTS ARE ALL must be coded without any report-names and must be the only REPORT(S) clause in the program.

RW-315-S **Invalid operand for VARYING.**

An operand following VARYING is not one of the permitted forms.

RW-316-S **VARYING allowed only with OCCURS or multiple LINE/COLUMN.**

The VARYING clause can be used only if there is an OCCURS clause or a multiple LINES or COLUMNS clause in the same entry.

RW-317-E **VARYING data-name duplicated.**

This message is issued if the same data-name has been used twice in the same VARYING clause.

RW-318-S **Invalid VARYING data-name.**

The names DATA-SUB-1/2/3/4 cannot be used as VARYING operands.

RW-319-E **VARYING data-name already in use in an enclosing entry.**

It is not permissible to use the same data-name for two nested VARYING clauses.

RW-320-S **REPORT SECTION item cannot appear in expression in SUM clause.**

The use of *SUM expression* is permitted only if all the items in the expression lie outside the REPORT SECTION.

RW-321-S **Expression summed cannot contain SUM: parentheses required.**

Expressions of the type SUM A + SUM B are not allowed because the SUM operand binds the entire arithmetical expression. For example, SUM A + B means SUM (A + B) not (SUM A) + B. The expression SUM A + SUM B must therefore be written (SUM A) + (SUM B).

RW-322-S **Only SOURCE expression can contain SUM.**

The SUM or COUNT term cannot be used in a DEPENDING ON expression, as a parameter to FUNCTION, or as part of a *conditional expression*.

RW-323-S **SUM not allowed in multiple-choice entry.**

The SUM clause or SUM term cannot be used in a multiple-choice entry. The code should be rewritten using separate entries.

RW-324-E **SUM in lone DETAIL not allowed except as cross-foot.**

If the report contains only one DETAIL group, that group cannot contain any SUM clauses except for *cross-footing* (totalling items within the same group).

RW-325-S **COUNT does not refer to REPORT SECTION entry.**

Only an entry defined in the REPORT SECTION can be counted.

RW-326-W **Data-name of VARYING referred to in FROM or BY expression.**

The FROM or BY expression of a VARYING clause refers to its own data-name. This may lead to unpredictable results.

RW-327-S **COUNT cannot be followed by expression or literal.**

Only simple data-names can be used in the COUNT clause.

RW-328-S **RESET cannot be used with SUM/COUNT expression.**

RESET is only allowed with the basic SUM or COUNT clause, not when they are a term in an expression.

RW-329-E **Multiple-choice entry not allowed at LINE level.**

The LINE clause cannot be written at the same level as COLUMN when the entry is a multiple-choice entry. They should be written at different levels.

RW-330-E **Printer TYPE xx not recognized: default TYPE assumed.**

The Printer Description File for the given "printer type" in the SELECT clause cannot be found.

RW-331-W **STYLE *xx is already in effect.***

The given style is unnecessary since it is already in effect having been defined at a higher level.

RW-332-E **Unknown STYLE name "*xx*": *changed to NORMAL.***

The given style cannot be found in the Printer Description File.

RW-333-E **No code defined for this STYLE clause: changed to NORMAL.**

This particular combination of styles is not permitted (although each style-name is valid).

RW-334-E **Contradictory combination of STYLEs: changed to NORMAL.**

You have coded two or more styles in combination that belong to the same mutually-exclusive class.

RW-337-E **STYLE not allowed in unprintable entry.**

An group entry with a STYLE clause must define at least one line or print column. (However, you **can** code STYLE in an **elementary** dummy entry.)

RW-339-S **STYLE within multiple-choice selection cannot have condition.**

A construct of the form:

```
05  COL 1  VALUE "ONE" WHEN FLD-A = 1
           VALUE "TWO" WHEN FLD-A = 2
           STYLE UNDERLINE WHEN FLD-B = 1.
```

should be re-coded as:

```
05  STYLE UNDERLINE WHEN FLD-B = 1.
  07  COL 1  VALUE "ONE" WHEN FLD-A = 1
              VALUE "TWO" WHEN FLD-A = 2.
```

RW-340-S xx ***clause has invalid syntax: ignored.***

The given clause is malformed.

RW-342-S **PRESENT AFTER clause has duplicated phrase: discarded.**

One of the options following PRESENT AFTER is repeated.

RW-343-S **PAGE and JUST not allowed in PRESENT AFTER in PH or PF group.**

The clause PRESENT JUST AFTER [NEW] PAGE can appear only in a body group.

RW-344-I **LAST DETAIL assumed to be xx.**

This informational message is issued if LAST DETAIL is not specified and its assumed value is not the same as PAGE LIMIT.

RW-345-W **LAST BODY GROUP present with FOOTING.**

LAST BODY GROUP means the same as FOOTING, so one is superfluous.

RW-346-S **PAGE option allowed only with TYPE CH.**

This refers to the OR PAGE phrase allowed only with a TYPE CH group.

RW-347-I **LAST BODY GROUP assumed to be xx.**

This message appears when no LAST BODY GROUP (or [LAST CONTROL] FOOTING) clause is specified and its value is inferred from the PAGE LIMIT clause and the size of any PAGE FOOTING group.

RW-348-I **NEXT GROUP syntax inappropriate for this TYPE of group.**

This is issued if NEXT DE OR CH GROUP is written in a TYPE DE or CH group or if NEXT BODY GROUP is written in a TYPE CF group, both of which imply a misunderstanding of the operation of the NEXT GROUP clause.

RW-349-S **COLUMN RIGHT/CENTER must have absolute value: changed to COLUMN PLUS 1.**

COLUMN RIGHT and COLUMN CENTER have no relative form.

RW-350-S **MULTIPLE PAGE not allowed in type PH, PF or CH with OR PAGE.**

These three group types must, by definition, be confined to one page and therefore cannot have a MULTIPLE PAGE clause.

RW-351-S **(NO) MULTIPLE PAGE must have at least 2 subordinate lines.**

A single line clearly cannot span two pages, so this clause is permitted only for a group of LINE entries, or a multiple LINES or LINE with OCCURS.

RW-352-S **Clause "xx" *not allowed in unpaged report.***

A PAGE clause must be present in the RD if certain clauses, such as GROUP LIMIT are used.

RW-353-S **GROUP LIMIT too low or too high for this group.**

The GROUP LIMIT cannot be less than (that is, positionally higher than) the normal highest (earliest) position for the group, nor greater than (that is, positionally lower than) the normal latest position.

RW-354-S **GROUP LIMIT allowed only in body group.**

GROUP LIMIT cannot be used except with a TYPE CH, DE, or CF group.

RW-355-E **NO MULTIPLE PAGE can be nested only within MULTIPLE PAGE.**

No other nested combinations of these clause are permitted.

RW-358-I **Some styles cannot be output directly and will be DEFERRED.**

The precompiler may be unable to generate code to resolved certain styles directly, especially when they require "overprinting" of part of a line, or "shadow printing" of characters. In such cases, the precompiler **defers** the resolution of the codes to execution time and your program will therefore require the Printer Description File and some additional run time routines whenever it executes.

RW-360-E **STYLE not allowed in individual multiple-choice entry.**

A STYLE clause cannot be coded between the SOURCE or VALUE clause and the WHEN phrase of a multiple-choice entry. It can only apply to the complete entry.

RW-371-E **Condition on STYLE not permitted in FD or RD.**

Only an unconditional STYLE clause is allowed for FD or RD entries. The required effect must be implemented in the report groups.

RW-372-E **Printer file was absent at precompile time and DEFERRED was assumed.**

The default Printer Description File could not be found.

RW-375-I **MODE PRNT has been assumed for file because of unresolved STYLE.**

A file handler interface is required because certain STYLE clauses cannot be resolved at precompilation time but require a run time component.

RW-377-E **STYLE may need to be on each LINE to take effect in page buffer.**

If the PAGE BUFFER feature is in effect, it is inadvisable to code the STYLE clause at a level between RD and LINE. Take the following construct:

```
03  STYLE HIGHLIGHT.
  05  LINE 1 ...
  05  LINE 2 ...
```

The ending control sequence for HIGHLIGHT is not stored until the end of line 2. If any data is placed on the right of line 1 in the page buffer, it may unintentionally also have the HIGHLIGHT property. The sample should therefore be re-coded:

```
03  LINE 1    STYLE HIGHLIGHT...
03  LINE 2    STYLE HIGHLIGHT...
```

RW-379-E **TYPE DEFERRED not allowed where record description follows FD.**

Since a deferred printer requires a file handler, there cannot be any (01-level) record descriptions following the FD for the file (compare error no. RW-145-E).

RW-381-S **WRAP/NO WRAP cannot be duplicated or nested.**

The only nesting allowed for this clause is a **single** NO WRAP nested within a **single** WRAP.

RW-382-S **WRAP cannot be used below LINE level.**

Only NO WRAP can be used at any level below that of LINE.

RW-383-E **NO WRAP must be subordinate to WRAP.**

Unlike NO MULTIPLE PAGE, NO WRAP cannot be coded independently.

RW-384-E **NO WRAP must encompass more than one elementary item.**

Since an elementary item cannot be split by the WRAP feature, NO WRAP is redundant unless it encloses more than one elementary printable item, or a multiple COLUMNS, or a COLUMN with OCCURS.

RW-385-S **WRAP COLUMN integer should be between 1 and LINE LIMIT.**

The *integer* following the TO or AFTER phrase clearly must stay within the normal limits for the report.

RW-870-S **Library member not found.**

The name specified in a COPY statement could not be found in SYSLIB or the indicated library.

RW-871-E **REPLACING phrase has invalid syntax: discarded.**

The REPLACING phrase will be ignored and the COPY processed with no replacements.

RW-872-E **Word "BY" not found: no replacements done.**

The end of a token (*identifier*, *literal*, *pseudo-text*, etc.) was reached in a COPY...REPLACING directive and the expected word BY was not found.

RW-873-E **Too many levels of nesting of COPY.**

This message indicates that a COPY statement has been found within the text of another COPY member and the number of levels to which this is permitted has been exceeded. (See *Installation and Operation* for details.)

RW-874-E **Pseudotext invalid or too long: no replacements done.**

Either the pseudotext on the left of BY is empty (that is: == ==) or it is longer than the maximum (normally 512 bytes).

RW-875-W **No items were replaced during COPY.**

No match was made against the REPLACING phrase of the COPY statement during the COPY.

RW-876-E **Invalid COPY syntax: passed to compiler unchanged.**

The word COPY is not followed by a word that could be a member-name.

RW-877-W **Pseudotext brackets assumed as required by REPLACE.**

The format of the REPLACE statement requires that each operand should be within *pseudotext* brackets (== ==). These were assumed for this REPLACE statement.

RW-880-S **BASIS not allowed: passed to compiler but outcome unpredictable.**

The BASIS directive is not supported by the precompiler unless it is the first COBOL statement in the source. The results are unpredictable as the precompiler expects a complete source program.

RW-881-W **CBL/PROCESS statement passed to compiler but not actioned.**

CBL or PROCESS directives are accepted by the precompiler but not actioned by it. Since they may alter the compiler options which the precompiler is unaware of, the results may be unpredictable. See also Part 6.

RW-882-W *nn* **sequence errors were found in the program.**

This message may appear if the SEQUENCE option is set.

# Index

Click on Page Numbers

## A


abbreviated forms 30
ABSENT WHEN/AFTER clause - see *PRESENT WHEN/AFTER*
absolute form of
  COLUMN 11, 88
  LINE 10, 105
  LINE and COLUMN 122
  NEXT GROUP 116
ADD statement, equivalence to 172
ADV option 45, 48
ALL form of VALUE literal 196
ALL option of TYPE CF 189
ALLOW SOURCE SUM CORR clause 18, **53**, 182, 185
alternating page formats 238
ANS-68
  features summary 279
  standard 3
ANS-74 differences 279
ANS-85
  changes to FD 44
  differences 279
  GLOBAL clause in RD 51
  USE GLOBAL statement 234
arithmetic expressions – see *expressions*
averages, calculating using COUNT 94
axes of summing 26, 173


## B


BLANK WHEN ZERO clause 86
BLOCK CONTAINS clause 45, 54
body groups
  definition 11
  introduction 7
  see also *CH, DE, CF groups*
boustrophedon sequence 201
BY phrase of VARYING 200


## C


carriage control character 45, 55
CENTER option of COLUMN 11, 32
CF groups 7, 14, 16, 32, 57, 118, **190**
CH groups 7, 33, 59, **190**
  with GROUP LIMIT 103
channels, use of in file handler 248
classes, of STYLE 164
CLOSE statement 16, 219, 228
  implicit on STOP RUN and CANCEL 46
Codasyl, extensions to language 279
CODE clause 18, 45, **54**
  with concurrent reports 241
  with file handler 248
CODE-VALUE special register 55
COL - see *COLUMN*
COLUMN clause 10, **87**
  with OCCURS 120
column totals 26, 174
COLUMN-COUNTER special register 87, **93**
compatibility with OS/VS COBOL, see also last part of each section of Parts 2, 3, and 4 4
concurrent reports 47, **240**
conditions 13, 28, **139**
consecutive reports 47
contained programs, with GLOBAL
  report 51
control breaks 15, 19, **59**, 213
CONTROL clause 9, 19, **56**
CONTROL FOOTING - see *CF groups*
CONTROL HEADING - see *CH groups*
CONTROL phrase of PRESENT WHEN 139
control-id, definition 56
CONTROLS clause - see *CONTROL clause*
controls with PRESENT AFTER 134
controls with SOURCE 160
COPY statement 284
correlation - see *SOURCE SUM correlation*
COUNT clause 94
COUNT, as term 27
cross-footing form of SUM 170, 181, 214, 216
CTIME function 98
cumulative totals- see *RESET phrase*
CURRENCY SIGN phrase 129
CURRENT-DATE special register 97, 160
customization - see *Installation and Operation*


## D


DATA DIVISION - see *REPORT SECTION*

data-name
of report entry 9, 14
of VARYING 199
referenced by SUM 167
database
commands 285
in FUNCTION 245
input from 16, 60, 232
output to 249
DATE function 34, 98
DAY function 98
DAYSIN function 98
DBCS 45, 82, 129, **195**, 196
DE groups 7, **190**
DECLARATIVES 127, 230
use of total fields 181
default
for PAGE sub-clauses 71
for TYPE 188
DEFERRED option with STYLEs 163
DEPENDING ON phrase
of OCCURS 23, 122, **124**
of OCCURS with PRESENT WHEN 146
DEPTH - see *STEP*
DETAIL - see *DE groups*
diagnostics - see *messages*
DISPLAY-1 - see *USAGE*
DOS/VS COBOL – see *OS/VS COBOL*
Double-Byte Character Set - see *DBCS*
dummy COLUMN 143
dummy entries, with FUNCTION 96
dummy groups 119, 155
for subtotalling 183
DUPLICATED clause **47**, 241

## E

elementary entries - see *COLUMN clause*
error messages - see *messages*
execution time - see *run time*
exit routine - see *USE BEFORE REPORTING*
expressions 12, 60, 65, 158, 167, 176
extensions, list of 279
EXTERNAL attribute, of report file 49
EXTERNAL report files 46
external SUM - see *non-REPORT SECTION SUM*

## F

FD entry 14, 43, 50
fiche - see *microfiche*
File Control Area 251
file handler - see *Independent Report File Handlers*
FILE SECTION 43
FILE STATUS clause 45
FILE-CONTROL paragraph 47
FINAL control 56, **59**
*Fips* flagging option 284
FIRST DETAIL clause 8, 69, 70
FIRST PAGE NO ADVANCING clause of FD 49
FOOTING sub-clause - see *LAST CF*
formats, summary of all 289
FROM phrase of VARYING 200
front sheet - see *RH groups*
FUNCTION clause 34, **96**
developing a Function 244
sample routine 246

## G

GENERATE statement 15, 59, **213**
effect on REPEATED 153
GLOBAL
in USE BEFORE REPORTING 231, 234
report files **46**, 49
report groups 213
reports 18, **51**, 219, 228
Glossary 297
GROUP INDICATE 133
GROUP LIMIT clause 32, **103**

## H

HEADING sub-clause 68, 70, 109
hexadecimal literals 196
hierarchy of controls 19, 59
HOLD status - see *SET statement*
horizontal repetition - see *COLUMN, OCCURS*

## I

IBM extensions, list 279
identifier form of CODE 55
in-line comments 284

Independent Report File Handlers 18, 35, 45, 217, 221, **248**
how to write one 249
sample 256
use of CODE data 55
INITIATE statement 15, **219**
with multiple reports 237
with total fields 175
insertion characters, in PICTURE 129
intermediate source 3

## J

JCL - see Installation and Operation
JUST option of PRESENT AFTER 135
JUSTIFIED clause 104

## K

Kanji - see *DBCS*
keyword tables
report files and RD 41
report groups 77
verbs 212

## L

label printing 153
laser printers 35, 163
LAST CF sub-clause 18, 71, 108
LAST CONTROL FOOTING - see *LAST CF* sub-clause
LAST DETAIL sub-clause 18, 69
layout of page 70
layout of report 5
left-shift symbol "<" 131
level-numbers 10, 82
LINAGE (prohibited clause) 45
LINE clause 10, **105**
LINE clause with OCCURS 23, 121
LINE LIMIT Clause 8, **63**
identifier form 152
LINE-COUNTER 12, 107, **112**, 116, 217, 222
uses 112
LINKAGE areas for file handler 251
lower-case, use in REPORT SECTION 39

## M

MDATE function 34, **99**
MDAYS function 99
messages 303
microfiche 250
MODE clause of SELECT 18, 45, **46**, 54
MODL file handler 46, 248, 256
modular programs, using Report Writer 256
MONTH function 99
MOVE function 100
multiple multiple form of
COLUMN 22, **90**, 161
CONTROL FOOTING 94, 139, 145, 172, **189**
LINE 23, **110**, 161
SOURCE 22, 122, 151, **161**
SUM 26, 168
VALUE 22, 110, 151, **197**
MULTIPLE PAGE clause 34, 77, 107, **114**
multiple reports 20, 36, **237**
identical copies 241
multiple-choice entries 28, **149**
MVS - see *Installation and Operation*

## N

negative values - see *SIGN*
NEXT BODY GROUP - see *NEXT GROUP*
NEXT DE OR CH GROUP - see *NEXT GROUP*
NEXT GROUP clause 32, 112, **116**
NEXT PAGE phrase
of LINE 105, 114
of NEXT GROUP 32, 117
NO MULTIPLE PAGE clause 115
NO WRAP clause 206
non-hierarchical CONTROLs 61
non-REPORT SECTION SUM 168, 172
NONE option of multiple SOURCE 161
NOPF file handler 49, 248
NORMAL, with STYLE 163

## O

OCCURS clause 23, **120**, 145, 161
with SUM 173
with VALUE 197
with VARYING 199
ON NEXT PAGE phrase - see *NEXT PAGE*
OPEN statement 16, 219

optional entries - see *PRESENT*
OS/390 - see *Installation and Operation*
OS/VS COBOL 4
comparisons of formats:
FILE SECTION and RD 41
PROCEDURE DIVISION 212
Report Groups 77
compatibility 4
*also at end of each section*
migration from 263
OSVS precompiler option 53, 130, 181, 216
and COLUMN clause 90
and SOURCE SUM correlation 53
OTHER option of PRESENT WHEN 28, **149**
OVERFLOW clause 18, **65**

## P

page advance processing - see *page-fit test*
Page Buffer feature 36, 48, 221, **222**
PAGE clause - see *PAGE LIMIT clause*
PAGE FOOTING - see *PF groups*
PAGE FOOTING totals 178
PAGE HEADING - see *PH groups*
PAGE LIMIT clause 8, **68**, 221
PAGE option
of CH group 33, **192**
of PRESENT AFTER 135
page, regions of 70
PAGE-COUNTER 12, **127**, 217, 228
page-fit test 103, **107**, 116, 124, 145, 223
parameters to file handler 47
parameter to FUNCTION 96
PF groups 7, 16, 110, 119, **190**
PH groups 7, 110, 119, **190**
PICTURE clause 12, 31, **129**, 150, 156
with VALUE 196, 198
PLUS - see *relative forms*
pre-break values of controls 19, 59
precision of totals 177, 182
precompiler 3
Preface 4
PRESENT AFTER clause 19, **133**
PRESENT WHEN clause 13, 28, **139**
effect on SUM 145, 175, 180
OTHER option 149
using total fields 180
with OCCURS 123
PRINT-SWITCH 217, 227
Printer Description File 164
PRNT file handler 45, 55, 221, **248**
procedural references to Report Writer data-names 84
PROCEDURE DIVISION 15, **211**
purpose of Report Writer 3

## Q

qualification
of CODE-VALUE 55
of control-id 56
of DETAIL group name 51
of LINE-COUNTER 113
of PAGE-COUNTER 127
of SET statement 221
of SOURCE operand 158
of total fields 168
of UPON operand 168
using control-id 60

## R

railroad track, explanation 4
RANDOM PAGE feature 48, 221
RD entry 8, 18, **50**
RDATE function 100
RECORD CONTAINS clause 45, 54
record description, after FD 45
RECORDING MODE 45, 48
with a file handler 48
reference modification 158
relative form of
COLUMN 11, 88
LINE 11, 105
NEXT GROUP 116
relative subscripting 158
RELEASE - see SET
REPEATED clause 25, 63, **152**
repetition - see *OCCURS, REPEATED, multiple forms*
REPLACE BY option of OVERFLOW 65
REPLACE statement 284
REPLACING option of COPY 284
REPORT as CONTROL operand 9, 56
Report Control Area 253
report files 41, 43
REPORT FOOTING - see *RF groups*
Report Group Descriptions 51

report groups (see also *TYPE* clause) 4, 5
coding rules 82
definition 77
REPORT HEADING - see *RH groups*
REPORT option of PRESENT AFTER 136
REPORT SECTION 8, **50**
REPORT SECTION SUM 169
report-name - choice of 8
report-name – definition 45
REPORT-NUMBER 36, 241
reports - introduction to 4
REPORTS clause of FD 14, 18, 45
reserved words 287
RESET phrase of SUM 168, 181, **186**
RF groups 7, 16, 119, **190**
use for writing trailer 45
RH groups 7, 114, 119, **190**
use for writing header 45
RIGHT option of COLUMN 11, 32
RMDATE function 100
rolling forward of totals 90, 94, 170, 175, 181, 214
ROUNDED phrase 12, 159
row totals 26, 174
run time messages 63, 66, 143, 152, 172, 181, 215, 224, 229
RYDATE function 100

## S

SELECT...ASSIGN clause 14, **44**
SET page buffer statements 36, 221
shorter forms of syntax 30
SIGN clause 156
size errors - see *OVERFLOW clause*
snaking columns 224
snapshots of total field 178
sorting, via COBOL SORT 57
SOURCE clause 12, **158**
as subject of SUM 167
OVERFLOW checks for expressions 66
referring to total field 178
SOURCE SUM correlation 53, 90, 172, 182, 183, 185, 214
SPECIAL-NAMES paragraph 54
spooling report data 18, 54, 241, 250
squeeze symbol "<" 31, 131
STATE function 101
STATEF function 101
STEP phrase 23, **121**
STIME function 101
STYLE clause **163**, 196
at FD level 47
at RD level 52
subheadings 135
subscripts - see *VARYING*
subtotalling 60, 172, 178, 181, 182, **184**, 214
SUM
as a term 27, 167
clause 14, 18, 22, 26, **167**
from a different report 175
use of total fields 176
with PRESENT WHEN 145, 175, 180
SUM OVERFLOW clause 18, **65**, 172
sum-counter - see *total fields*
summary reporting 6, 19, 155, 182, 183, 189, **213**
SUPPRESS PRINTING statement 227
symbolic characters, as VALUE 196
Syntax summary 289

## T

tables - see *OCCURS, SUM*
TERMINATE statement 16, **228**
with multiple reports 237
with total fields 181
TIME function 34, 101
TIME-OF-DAY special register 160
total fields 169
total fields, uses 176
totalling - see *SUM*
totals only reports 183
truncation
of expressions 66
of PICTURE 158
of line 144
of records 48
of totals 66, 169, 177
TYPE clause 6, 10, 20, 51, **188**
TYPE clause of SELECT 46

## U

UNLESS phrase of PRESENT 140
unprintable fields 90, 147, 164, 175, 177, 180
UPON phrase of INITIATE 45, 219
UPON phrase of SUM 168, 172, **184**, 185, 216
USAGE clause 195

USE BEFORE REPORTING directive 127, 181, 211, 213, 217, 227, **230**
User-written extensions - see *Independent Report File Handlers*, *FUNCTION clause*
USING phrase of MODE 47

## V

VALUE clause 12, **196**
as subject of SUM 169
variable number of repetitions 23
variable-length fields 31, 32, 86, 89, 93, **131**
variable-length records 48
variable-position fields 64
VARYING clause 24, **199**
verbs used in Report Writer 4, **211**
vertical repetition - see *LINE, OCCURS*
VM - see *Installation and Operation*

## W

WIDTH - see REPEATED clause, STEP
wild cards, in COPY statement 284
WITH CODE - see CODE
WITH PAGE BUFFER - see Page Buffer feature
WITH RANDOM PAGE - see RANDOM PAGE feature
WRAP clause 34, 63, **203**
WRITE statements, explicit 45

## Y

YDATE function 101

## Z

zero divide - see *OVERFLOW*
ZIP function 102

## etc

3800 - see laser printer
< and > PICTURE symbols 31, 131